COMTECH EF DATA™

A SUBSIDIARY OF COMTECH TELECOMMUNICATIONS CORP.

SDR-54A

Satellite Demodulator
Installation and Operation Manual

Part Number MN/SDR54A.IOM **Revision 4**

SDR-54A

Satellite Demodulator
Installation and Operation Manual

Comtech EF Data is an ISO 9001
Registered Company.

Part Number MN/SDR54A.IOM
Revision 4
July 10, 2003

Customer Support

Contact the Comtech EF Data Customer Support Department for:

Product support or training
Information on upgrading or returning a product
Reporting comments or suggestions concerning manuals

A Customer Support representative may be reached at:

Comtech EF Data
Attention: Customer Support Department
2114 West 7th Street
Tempe, Arizona 85281 USA

480.333.2200 (Main Comtech EF Data Number)
480.333.4357 (Customer Support Desk)
480.333.2161 FAX

or, E-Mail can be sent to the Customer Support Department at:

service@comtechefdata.com

Contact us via the web at www.comtechefdata.com.

1. To return a Comtech EF Data product (in-warranty and out-of-warranty) for repair or replacement:

2. Request a Return Material Authorization (RMA) number from the Comtech EF Data Customer Support Department.

3. Be prepared to supply the Customer Support representative with the model number, serial number, and a description of the problem.

4. To ensure that the product is not damaged during shipping, pack the product in its original shipping carton/packaging.

5. Ship the product back to Comtech EF Data. (Shipping charges should be prepaid.)

For more information regarding the warranty policies, see, p. xiv.

Table of Contents

CHAPTER 1. INTRODUCTION 1–1

1.1 Demodulator Functions 1–1

1.2 Overview 1–2

1.3 Options 1–4

1.4 New in this Revision 1–4

CHAPTER 2. INSTALLATION 2–1

2.1 Unpacking 2–1

2.2 System Installation 2–2

CHAPTER 3. EXTERNAL CONNECTORS 3–1

3.1 External Connections 3–1
3.1.1 RF Input (J1) 3–2
3.1.2 Fault Connector (J2) 3–3
3.1.3 M&C Port (J3) 3–3
3.1.3.1 Rear Panel Connector Pinout 3–3
3.1.3.2 Front Panel Connector Pinout 3–4
3.1.4 Data Out Connector (J4) Interface Type Jumpers 3–4
3.1.4.1 Data Out Connector (J4) Jumper Location 3–5
3.1.4.2 Data Out Connector (J4) 3–5
3.1.4.3 Data Out Connector (J4) 3–6
3.1.5 Power Entry 3–6
3.1.5.1 AC Option 3–6
3.1.5.2 48 VDC Option 3–7
3.1.5.3 24 VDC Option 3–7
3.1.6 Ground (GND) 3–7

CHAPTER 4. OPERATION 4–1

4.1 Front Panel 4–1
4.1.1 Indicators 4–2
4.1.2 LNB Power 4–2

4.2 Configuration Setup 4–2

4.3 Cooling Fan 4–3

CHAPTER 5. DEMUX OPTION 5–1

5.1 DEMUX Overview 5–1

5.2 DEMUX 2/4-Channel (Option) 5–2
5.2.1 Description 5–2
5.2.2 Installation 5–3
5.2.3 DEMUX 2/4-Channel Specification 5–5
5.2.4 Tributary Data Interface Connector RS-422 (J4) 5–5

5.3 DEMUX 8-Channel (Option) 5–7
5.3.1 Description 5–7
5.3.2 Installation 5–8
5.3.3 DEMUX 8-Channel Specification 5–10
5.3.4 Tributary Data Interface Connector RS-422 (J5 and J6) 5–11

CHAPTER 6. REED-SOLOMON 6–1

6.1 Introduction 6–1

6.2 Descrambler 6–2

6.3 Deinterleaver 6–3

6.4 Reed-Solomon Codec 6–4

6.5 Reed-Solomon Installation 6–4

6.6 Functionality 6–6
6.6.1 Correlator 6–6
6.6.2 Error Detection 6–6

6.7 BER Performance 6–7
6.7.1 Specification 6–8
6.7.2 Interface Connector 6–9

CHAPTER 7. FULLY ACCESSIBLE SYSTEM TOPOLOGY (FAST) 7–1

7.1 FAST Accessible Options 7–1

7.2 FAST System Theory 7–1

7.3 Implementation 7–2

CHAPTER 8. SPECIFICATIONS 8–1

8.1 Specifications 8–1
8.1.1 Prime Power Interface 8–3
8.1.2 Desired Carrier Input Power 8–3
8.1.3 Composite to Desired Input Power 8–3
8.1.4 IF Input Shape 8–3
8.1.5 Adjacent Channel Interface Performance 8–4
8.1.6 Frequency Stability 8–4

8.2 Digital Data Rates 8–4
8.2.1 Demodulator and FEC Decoding Types 8–5
8.2.2 BPSK and QPSK BER Performance with Noise 8–5
8.2.3 QPSK and BPSK Performance with Noise and Reed-Solomon 8–5

8.3 Carrier and Clock Acquisition Time 8–7
8.3.1 Received IF Carrier Acquisition Range 8–7
8.3.2 Received Data Clock Frequency Error 8–7

8.4 Signal Level for Antenna Pointing 8–8

8.5 Unit-to-Unit Dalay Variation 8–8

8.6 Monitor and Control (M&C) Specification 8–9
8.6.1 M&C Interface Connector(s) 8–10
8.6.2 M&C Interface Configurtion 8–10
8.6.3 M&C Communications 8–10
8.6.4 M&C Message Formats 8–10

8.7 Monitored Signals 8–10

8.8 Faults Monitored 8–11

8.9 System Status 8–11

8.10 Space Link Remote Control (SLRC) Specifications 8–12

8.11 Integrated Demultiplexer Option 8–13

8.12 8-Channel Demux (SP/5839) (Comtech EF Data) 8–14
8.12.1 Specifications 8–14
8.12.2 Tributary Data Connector (J3) 8–15
8.12.3 Tributary Data Connector (J4) 8–16
8.12.4 Aggregate Data/Clock Input, Power Connector 8–17
8.12.5 Mode and SYNC Connector 8–17
8.12.6 Secondary Demodulator Interface Connector 8–17

8.13 Reed-Solomon Option 8–18

APPENDIX A. REMOTE CONTROL OPERATION A–1

A.1 General A–1

A.2 Message Structure A–1
A.2.1 Start Character A–2
A.2.2 Device Address A–2
A.2.3 Command/Response A–3
A.2.4 End Character A–3

A.3 Configuration Commands/Responses A–4
A.3.1 Demodulator A–4

A.4 Status Commands/Responses A–7

A.5 DEMUX Commands/Responses A–10

A.6 Interface Configuration Status A–11

GLOSSARY g-1

INDEX i-1

Figures

Figure 1-1. SDR-54A Desktop Unit 1–2
Figure 1-2. SDR-54A Rack Mount Unit 1–2
Figure 2-1. Interconnect Diagram 2–2
Figure 3-1. SDR-54A Desktop Unit (Rear and Front Panel) 3–2
Figure 3-2. SDR-54A Rack Mount Unit (Rear and Front Panel) 3–2
Figure 3-3. Data Out (J4) Interface Jumpers 3–4
Figure 3-4. RS-530 Jumper Location (J4) 3–5
Figure 4-1. SDR-54A Desktop Unit (Front Panel) 4–1
Figure 4-2. SDR-54A Rack Mount Unit (Front Panel) 4–1
Figure 5-1. DEMUX 2/4 PCB 5–2
Figure 5-2. Installation of DEMUX 2/4 Card 5–4
Figure 5-3. DEMUX 8-Channel PCB 5–7
Figure 5-4. Installation of DEMUX 8-Channel Card 5–9
Figure 6-1. Reed-Solomon Card 6–1
Figure 6-2. V.35 Self-Synchronizing Descrambler 6–2
Figure 6-3. R-S Code Word Format 6–3
Figure 6-4. Installation of Reed-Solomon Card (AS/6285) 6–5
Figure 6-5. Reed-Solomon Decoder Section Block Diagram 6–7
Figure 6-6. BER Performance with Noise, Viterbi Decoder, and Reed-Solomon (Optional) 6–8
Figure 8-1. BPSK and QPSK BER Performance 8–6

Tables

Table 3-1. External Connectors 3–1
Table 3-2. RF Input (J1) Specification 3–2
Table 3-3. Fault Connector 9-Pin D Sub Female 3–3
Table 3-4. Rear Panel Connector Pinouts 3–3
Table 3-5. Front Panel Connector Pinouts 3–4
Table 3-6. Data Interface Connector 25-Pin D Sub 3–5
Table 3-7. Data Interface Connector (RS-232) 25-Pin D Sub 3–6
Table 3-8. AC Option 3–6
Table 3-9. 48 VDC Option 3–7
Table 3-10. 24 VDC Option 3–7
Table 4-1. Indicators 4–2
Table 5-1. Summary of DEMUX Specification 5–5
Table 5-2. Tributary Data Interface Connector (RS-422) 5–5
Table 5-3. Tributary Data Interface Connector (RS-232) 25-Pin D Sub (Female) 5–6
Table 5-4. DEMUX 8-Channel Specification 5–10
Table 5-5. Monitor & Control Additions 5–11
Table 5-6. Tributary Data Interface Connector (J5) 5–11
Table 5-7. Tributary Data Interface Connector (J6) 5–12
Table 5-8. Aggregate Data and Clock 5–12
Table 6-1. R-S Codes 6–4
Table 6-2. BER PErformance Curve Data 6–7
Table 6-3. Reed-Solomon Specifications 6–8
Table 6-4. Interface Connector 6–9
Table 8-1. Demodulator Specifications 8–1
Table 8-2. Environmental and Physical Specification 8–2
Table 8-3. Digital Data Rates 8–4
Table 8-4. Demodulator and FEC Decoding Types 8–5
Table 8-5. BPSK and QPSK BER Performance 8–5
Table 8-6. BPSK and QPSK BER Performance 8–5
Table 8-7. Carrier and Clock Acquisition Time 8–7
Table 8-8. Monitor and Control Specifications 8–9
Table 8-9. Aggregate Data/Clock Input and Power Connector (J3) 8–14
Table 8-10. 8-Channel Demux Specifications 8–14
Table 8-11. Tributary Data Connector (J3) 8–15
Table 8-12 Tributary Data Connector (J4) 8–16
Table 8-13. Aggregate Data/Clock Inpout, Power Connector 8–17
Table 8-14. Mode and SYNC Connector (JP2) 8–17
Table 8-15. Secondary Demodulator Interface Connector 8–17
Table 8-16. Reed-Solomon Specifications 8–18

Preface

About this Manual

This manual provides installation and operation information for the Comtech EF Data SDR-54A satellite demodulator. This is a technical document intended for earth station engineers, technicians, and operators responsible for the operation and maintenance of the SDR-54A.

Conventions and References Used in this Manual

Cautions and Warnings

CAUTION indicates a hazardous situation that, if not avoided, may result in minor or moderate injury. CAUTION may also be used to indicate other unsafe practices or risks of property damage.

WARNING indicates a potentially hazardous situation that, if not avoided, could result in death or serious injury.

IMPORTANT indicates a statement that is associated with the task being performed. .

Trademarks

Product names mentioned in this manual may be a trademark or registered trademarks of their respective companies and are hereby acknowledged.

Metric Conversion

Metric conversion information is located on the inside back cover of this manual. This information will assist the operator in cross-referencing English to Metric conversions.

Related Documents

The following documents are referenced in this manual:

- *Comtech EF Data Specification* SP/5231, SOS 2/4 Channel Demux
- *Comtech EF Data Specification SP/5487 SLRC - Space Link Remote Control*
- *Comtech EF Data Specification SP/5839 Comtech EF Data 8-Channel Demux*
- *Comtech EF Data Specification SP/6258 SDM-300A (Reed-Solomon)*
- *Comtech EF Data Specification* SP/6537, SDR-54A L-Band Demodulator

Overview of Changes to Previous Edition

Changes made to Revision 3 include:

Total revision and reformat.
Added FW/5445-1K Verison: 4.2.4

Reporting Comments or Suggestions Concerning this Manual

Comments and suggestions regarding the content and design of this manual will be appreciated. To submit comments, please contact the Comtech EF Data Customer Support Department according to the information in the following section.

Warranty Policy

This Comtech EF Data product is warranted against defects in material and workmanship for a period of 1 year from the date of shipment. During the warranty period, Comtech EF Data will, at its option, repair or replace products that prove to be defective.

For equipment under warranty, the customer is responsible for freight to Comtech EF Data and all related custom, taxes, tariffs, insurance, etc. Comtech EF Data is responsible for the freight charges **only** for return of the equipment from the factory to the customer. Comtech EF Data will return the equipment by the same method (i.e., Air, Express, Surface) as the equipment was sent to Comtech EF Data.

Limitations of Warranty

The foregoing warranty shall not apply to defects resulting from improper installation or maintenance, abuse, unauthorized modification, or operation outside of environmental specifications for the product, or, for damages that occur due to improper repackaging of equipment for return to Comtech EF Data.

No other warranty is expressed or implied. Comtech EF Data specifically disclaims the implied warranties of merchantability and fitness for particular purpose.

Exclusive Remedies

The remedies provided herein are the buyer's sole and exclusive remedies. Comtech EF Data shall not be liable for any direct, indirect, special, incidental, or consequential damages, whether based on contract, tort, or any other legal theory.

Disclaimer

Comtech EF Data has reviewed this manual thoroughly in order that it will be an easy-to-use guide to your equipment. All statements, technical information, and recommendations in this manual and in any guides or related documents are believed reliable, but the accuracy and completeness thereof are not guaranteed or warranted, and they are not intended to be, nor should they be understood to be, representations or warranties concerning the products described. Further, Comtech EF Data reserves the right to make changes in the specifications of the products described in this manual at any time without notice and without obligation to notify any person of such changes.

If you have any questions regarding your equipment or the information in this manual, please contact the Comtech EF Data Customer Support Department.

This page is intentionally left blank.

Chapter 1. Introduction

This chapter describes the SDR-54A satellite demodulator, hereinafter referred to as "the demodulator."

Two versions of the SDR-54A are available:

- Desktop (Figure 1-1)
- Rack Mount (Figure 1-2)

1.1 Demodulator Functions

For the purposes of this document, a demodulator will consist of a device having the following functions:

- Perform filtered QPSK or BPSK demodulation from carriers of variable frequencies/amplitudes.
- Decode the data.
- Descramble the data.
- Provide Terrestrial data interface.
- Provide Monitor and Control interface for remote operation.
- Maintain full functionality of SDM-51, SDM-52, and all their respective configurations.

Figure 1-1. SDR-54A Desktop Unit

Figure 1-2. SDR-54A Rack Mount Unit

1.2 Overview

The demodulator provides all necessary functions for accepting L-Band digital data transmissions, extracting the data, and providing it to the user in a standard serial data format.

The demodulator is composed of four units:

- L-Band digital demodulator
- DEMUX (optional)
- L-Band low noise block (LNB) converter (required)
- Reed-Solomon (optional)

The demodulator is available as either a desktop or rack mount unit. The demodulator may be located away from the LNB, provided the interconnecting cable losses do not reduce the signal to below the minimum discernible level of the demodulator (typically 30 dB of loss, dependent on the receive signal level).

The demodulator provides all necessary functions for converting an RF modulated data carrier input into a digital synchronous data output.

The LNB converter is mounted directly to the antenna and preserves received signal-to-noise while providing gain and frequency down conversion. This feature minimizes signal degradation between the antenna site and demodulator. An appropriate LNB must be used in order to properly operate the demodulator. LNB primary power is provided by the demodulator via the coaxial signal interconnect. See Chapter 8 for LNB specification information.

A fully compatible LNB is available from Comtech EF Data. Contact Comtech EF Data Customer Support representative for more information.

L-Band input frequencies are tunable from 950 to 1550 MHz, in graduated steps of 10 kHz. The demodulator will lock to a carrier within the frequency stability range of the receive system (± 500 kHz), and will perform coherent detection for QPSK and BPSK modulation.

Forward Error Correction (FEC) is provided by the demodulator's integrated Viterbi decoder, which can support 1/2, 3/4, and 7/8 rate coding, along with the optional Reed-Solomon.

Digital data output is selectable between synchronous RS-232 or RS-422 format. Data rates from 4.8 to 1250 kbps for BPSK and 9.6 to 4000 kbps for QPSK. The demodulator is compatible with the following:

- INTELSAT open network filtering
- Comtech EF Data closed network filtering
- SDM-51, -52

Monitor and control of the demodulator is provided by a user-accessible RS-232 serial port. Once configured, power may be removed for at least 1 year and reapplied without loss of configuration.

The demodulator incorporates features for remote configuration over the satellite channel using Comtech EF Data's Space Link Remote Control (SLRC) protocol.

For more information about the SLRC, refer to the *Comtech EF Data Space Link Remote Control System User's Guide.*

Provisions for optional demultiplexers are as follows:

- Option 1: Synchronous/symmetrical DEMUX 2- or 4-channel. Maximum tributary data rates of :

- 128 kbps in the 2-channel mode.
- 64 kbps in the 4-channel mode.

- Option 2: Synchronous/asymmetrical DEMUX 8-channel demultiplexer with maximum tributary data rate of 4000.0 kbps.

Notes:

1. When using the optional DEMUX 2/4-daughter card, the data output will be in RS-422 format only.
2. When using the optional DEMUX 8-Channel daughter card, the data output is software selectable to RS-422 or RS-232.

Refer to Chapter 5 for additional information about DEMUX options.

1.3 Options

- Rack mounted or desktop configurations
- 48 VDC input power
- 24 VDC input power
- 2- or 4-channel synchronous DEMUX (SP/5231 SOSOFT)
- 4- or 8-channel synchronous DEMUX (SP/5839 Comtech EF Data)
- Reed-Solomon Concatenated Codec IESS 308/309 (SP/6285)

1.4 New in this Revision

Incorporated FW/5445-1K, version 4.2.4.
Replaced company name to Comtech EF Data.

Chapter 2. Installation

This chapter provides unpacking, installation instructions.

2.1 Unpacking

The demodulator and manual are packaged in pre-formed reusable cardboard cartons containing foam spacing for maximum shipping protection.

To remove the unit from the box, proceed as follows:

To avoid damage to the unit, do not use any cutting tool, which will extend more than 1 inch into the container.

1. Cut the tape at the top of the carton, where it is labeled "OPEN THIS END."
2. Lift out the cardboard/foam spacer covering the demodulator.
3. Remove the demodulator, manual, and power cord from the carton.
4. Save the packing material for reshipment.
5. Inspect the equipment for damage incurred during shipment.
6. Ensure the shipment is complete by checking the equipment against the packing list shipped with the equipment.
7. Refer to Section 2.2 for system installation instructions.

2.2 System Installation

Note: The demodulator is configured at the factory. Use the remote control interface on the front or rear panel to alter the configuration. For information on configuration and remote control, refer to Appendix A.

After unpacking the system as outlined in Section 2.1, install the system as follows:

1. Attach an LNB converter to the antenna and connect one end of the LNB/demodulator interconnecting cable to the LNB coaxial output.

2. Refer to Figure 2-1 prior to cabling the demodulator, the output data port must be configured for the appropriate interface: RS-232 or RS-422.

   a. The interface is configured as RS-422 at the factory.

   b. If RS-232 is required, remove the demodulator cover, locate the jumpers of JP8 (directly behind the DATA OUT connector), and reposition , as outlined in Chapter 3.

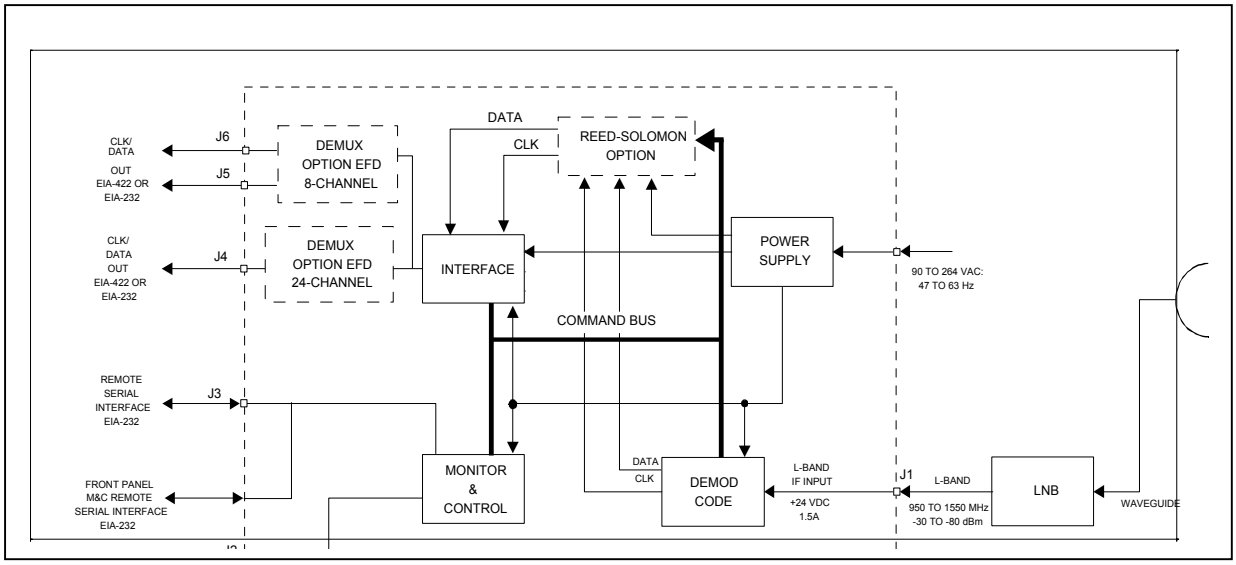

Figure 2-1. Interconnect Diagram

3. Connect the AC power cord and turn on the demodulator. The front panel POWER indicator should illuminate and the FAULT indicator should be off.

4. Configure the demodulator. Refer to Appendix A for specific demodulator configuration information.

Demodulation frequency, rate, and reacquisition time are defined as follows:

Term	Definition
Frequency	Carrier frequency of the desired channel
Rate	Data rate of the desired channel
Reacquisition Time	Time delay from incidental carrier loss until the modem initiates carrier search

Note: The above values, when set, are retained by the demodulator until changed by the user. Once the demodulator is configured and operating, the terminal is no longer required.

Once configured, the demodulator will perform an acquisition search for the desired channel. If a signal is present at a sufficient level, the CARRIER DETECT indicator on the front panel will illuminate. Data will be present at the DATA OUT serial port, if the detected signal can be demodulated and decoded.

Notes:

Chapter 3. External Connectors

This chapter provides a description of external connections.

3.1 External Connections

Connections between the demodulator and other equipment are made through external connectors. These connectors are listed in Table 3-1, and their locations are shown in Figure 3-1 and Figure 3-2. The use of each connector is described in the following paragraphs.

Table 3-1. External Connectors

Ref. Desig.	Name	Type	Function
J1	RF INPUT	F coax	LNB input/LNB power
J2	FAULT	9-pin D	External Fault Status
J3	M&C	9-pin D	Configuration and Status (RS-232)
J4	DATA OUT (RX Data)	25-pin D	RS-232 or RS-422 Selectable
*J5	DEMUX T1 through T4	25-pin D	DEMUX Outputs T1 through T4
*J6	DEMUX T5 through T8	25-pin D	DEMUX Outputs T5 through T8
None	M&C REMOTE	9-pin D	Remote Configuration and Status
None	PRIME POWER	Standard	AC Power Input
None	GND	#10-32	Chassis Ground

***Note:** J5 and J6 are optional.

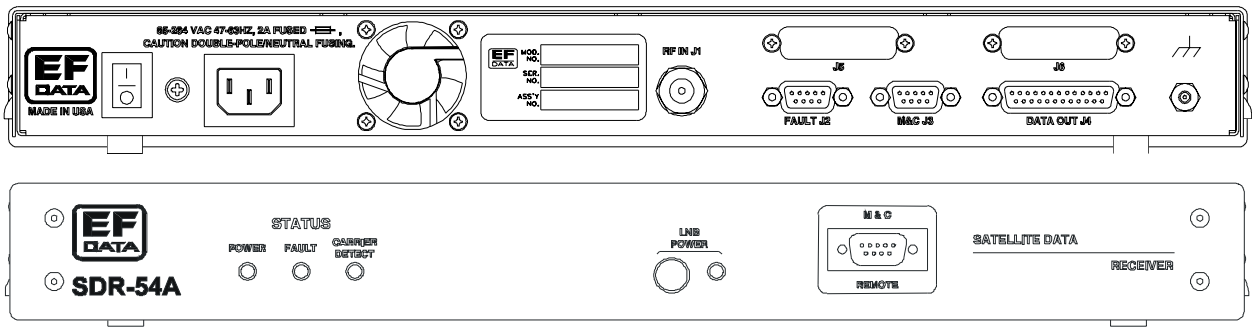

Figure 3-1. SDR-54A Desktop Unit (Rear and Front Panel)

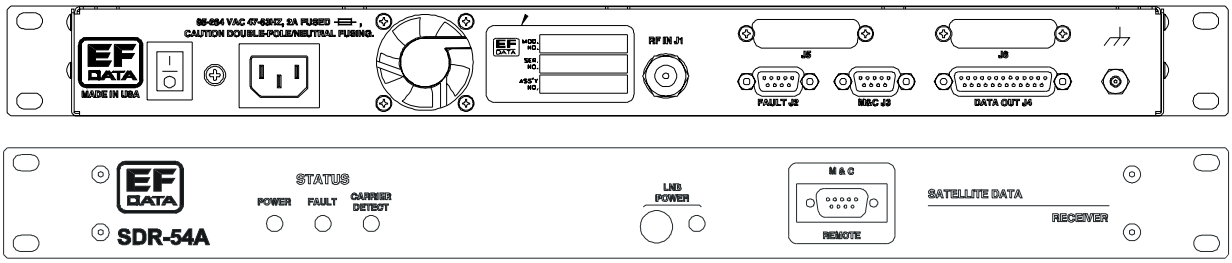

Figure 3-2. SDR-54A Rack Mount Unit (Rear and Front Panel)

3.1.1 RF Input (J1)

Refer to Table 3-2 for RF Input (J1) specification.

Table 3-2. RF Input (J1) Specification

Parameter	Specification
Connector type	F Type (Female) 75Ω
Return loss	-8 dB or greater from 950 to 1550 MHz

3.1.1.1 L-Band RF Input

This is a type F female coaxial connector for signal input to the demodulator unit from the LNB. This connector also provides DC power to the LNB along the center conductor, with the shield as the return.

3.1.2 Fault Connector (J2)

A fault connection occurs when any of the indicators in the demodulator fault status command show a fault condition.

Refer to Table 3-3 for Fault connector specifications.

Table 3-3. Fault Connector 9-Pin D Sub Female

Pin #	Signal Function	Name
1	Ground	GND
2	FORM C Normally Closed	FCNC
3	FORM C Common	FCC
4	FORM C Normally Open	FCNO
8	TTL OPEN Collector	TTL-OC

Note: A connection between FCNO (pin 4) and FCC (pin 3) indicates no fault.

3.1.3 M&C Port (J3)

The M&C port enables the user to exercise the control and status commands listed in Appendix A. The port is accessible from either the front or rear panel. Only one of these ports may be used at a time.

3.1.3.1 Rear Panel Connector Pinout

The M&C port is provided on a 9-pin female D connector. Screw locks are provided for mechanical security of the mating connector. This connector is a DCE interface. Pinouts are described in Table 3-4:

Table 3-4. Rear Panel Connector Pinouts

Pin #	Signal Function	Name
2	Receive data output (RS-232-C)	RX
3	Transmit data input (RS-232-C)	TX
5	Ground	GND
*7	Request to send input (RS-232-C)	RTS
*8	Clear to send output (RS-232-C)	CTS
9	AGC Analog 0 to 5 VDC at 10 mA	AGC

***Note:** RTS and CTS are internally connected together.

3.1.3.2 Front Panel Connector Pinout

The M&C port is provided on a 9-pin female D connector. Screw locks are provided for mechanical security of the mating connector. This connector is a DCE interface. Pinouts are described in Table 3-5:

Table 3-5. Front Panel Connector Pinouts

Pin #	Signal Function	Name
1	+5 VDC at 100 mA	+5
2	Receive data output (RS-232-C)	RX
3	Transmit data input (RS-232-C)	TX
5	Ground	GND
*7	Request to send input (RS-232-C)	RTS
*8	Clear to send output (RS-232-C)	CTS
9	AGC Analog 0 to 5 VDC at 10 mA	AGC

***Note:** RTS and CTS are internally connected together.

3.1.4 Data Out Connector (J4) Interface Type Jumpers

The J4 port is the interface between the demodulator and the user's terrestrial equipment. This port may be configured internally as an RS-232 or RS-422 interface, as required, by removing the modem cover and positioning the jumpers of JP3 (Figure 3-3), as follows:

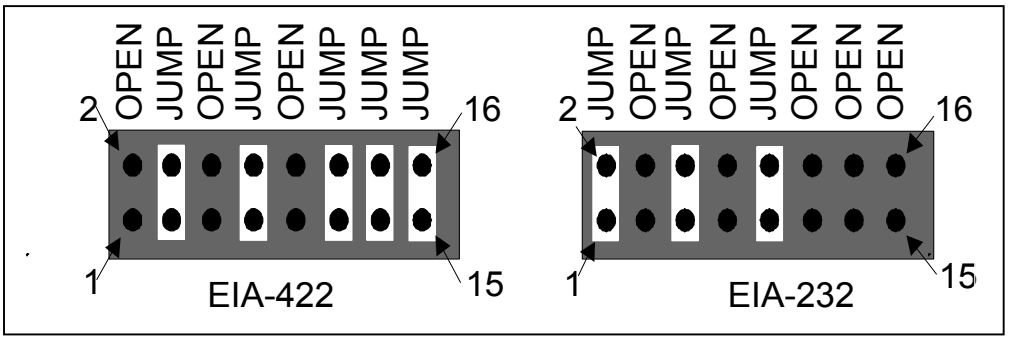

Figure 3-3. Interface Type Jumper Location (JP3)

Notes:

1. If optional DEMUX 2/4 PCB is installed, position jumpers for RS-422 operation.
2. If optional DEMUX 8-Channel PCB is installed, refer to Chapter 5.

3.1.4.1 Data Out Connector (J4) Pinout Jumper Location

The pinout configuration for the Data Out Connector (J4) can be set for:

- Standard (SDR-54A, SDM-51/-52 compatible)
- EIA-530

This is accomplished by removing the cover and positioning the jumper blocks at JP4 and JP5 to the appropriate positions. Refer to Figure 3-4 for EIA-530 jumper location.

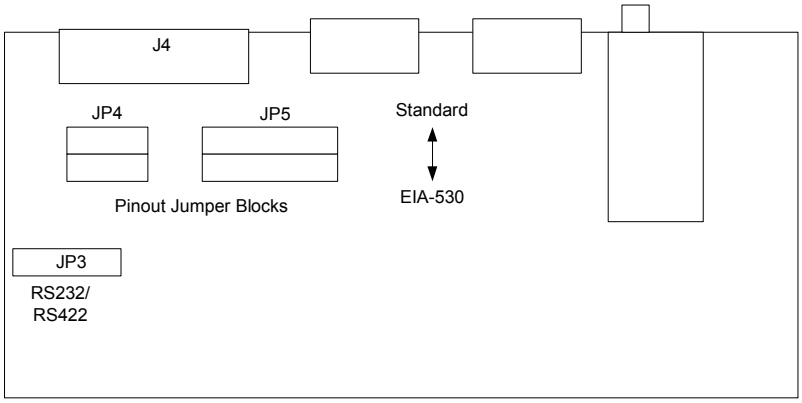

Figure 3-4. Data Pinout Jumper Location (JP4/JP5)

3.1.4.2 Data Out Connector (J4)

Refer to Table 3-6 for data interface connector specifications. This table reflects a non-DEMUX operation.

Table 3-6. Data Interface Connector 25-Pin D Sub

Standard	RS-422	EIA-530
DB25M (J4) Pin #	Signal Name	DB25M (J4) Pin#
3	RX Data A (-)	3
4	RX Data B (+)	16
17	RX Clock A (-)	17
18	RX Clock B (+)	9
	CD/RR A (-)	8
20	CD/RR B (+)	10
	DM A (-)	6
	DM B (-)	22
	DF	21
7	SIG GND	7
	SHLD GND	1

3.1.4.3 Data Out Connector (J4)

Refer to Table 3-7 for data interface connector specifications.

Table 3-7. Data Interface Connector (EIA-232)
25-Pin D Sub

Standard	EIA-432	EIA-530
DB25M (J4) Pin #	Signal Name	DB25M (J4) Pin #
3	RX Data	3
17	RX Clock	17
8	CD/RR	8
N/A	DM	6
7	SIG GND	7
N/A	SHLD GND	1

Note: Table 3-7 reflects non-DEMUX operation.

3.1.5 Power Entry

3.1.5.1 AC Option

The AC power is supplied to the demodulator by a standard, detachable, non-locking, 3-prong power cord. Refer to Table 3-8 for the required specifications.

Table 3-8. AC Option

Parameter	Specification
Connector Type	I.E.C.
Input Power	40W maximum.
Input Voltage	90 to 132VAC, or 175 to 264 VAC. Unit switches ranges automatically.
Fuse Protection (internal on power supply)	3.15A slo-blo. Line and neutral fusing. 5mm type fuse.

3.1.5.2 48 VDC Option

Table 3-9. 48 VDC Option

Parameter	Specification
Connector Type	20A 3-way screw-type terminal block.
Input Power	40W maximum.
Input Voltage	46 to 50 VDC.
Fuse Protection (internal on power supply)	2A slo-blo.

3.1.5.3 24 VDC Option

Table 3-10. 24 VDC Option

Parameter	Specification
Connector Type	20A 3-way screw-type terminal block.
Input Power	40W maximum.
Input Voltage	23 to 25 VDC.
Fuse Protection (Internal on power supply)	2A slo-blo.

3.1.6 Ground (GND)

A #10-32 stud is available on the rear for connecting a common chassis ground among all of the equipment.

Note: The safety ground is provided through the AC power connector.

Notes:

Chapter 4. Operation

This chapter describes the operation of the indicators and controls located on the unit.

4.1 Front Panel

Refer to Figure 4-1 and Figure 4-2 for front panel views of the Desktop and Rack Mount versions of the demodulator.

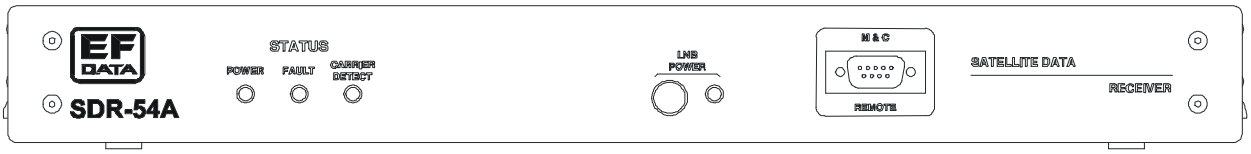

Figure 4-1. SDR-54A Desktop Unit (Front Panel)

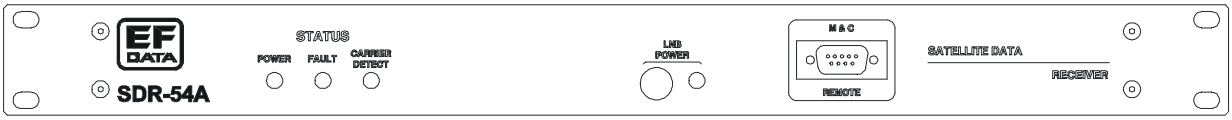

Figure 4-2. SDR-54A Rack Mount Unit (Front Panel)

4.1.1 Indicators

There are three LED indicators for monitoring demodulator status and one LED indicator for monitoring external features, see Table 4-1:

Table 4-1. Indicators

Monitoring Demodulator Features		
Feature	**Color**	**Description**
POWER	Green	Indicates that power is applied to the unit.
FAULT	Red	Indicates that a demodulator fault condition exists.
CARRIER DETECT	Green	Indicates carrier presence.
Monitoring External Features		
LNB POWER	Green/Red	Indicates LNB power enabled/LNB Fault.

Note: Due to the sensitivity of the SDR-54A tuner, a Carrier Detect indication may be seen at some frequencies without the LNB attached.

4.1.2 LNB Power

LNB power is controlled by a pushbutton switch. An LED indicates when the LNB power is enabled. The power (+24 VDC) is supplied along the center conductor of the IF input coaxial cable.

- If the current drawn by the LNB is within the established limits, the LED will illuminate GREEN.
- If the current drawn by the LNB is out of the established limits, the LED will illuminate RED.

Refer to Chapter 8 for additional information.

4.2 Configuration Setup

The SDR-54A must be configured using a remote terminal. For information on remote control operation, refer to Appendix A.

4.3 Cooling Fan

The SDR-54A uses a 12VDC fan to provide adequate cooling of the unit. Be sure to provide sufficient clearance (1 inch minimum) on the back and sides of the unit for proper ventilation.

Units manufactured prior to May 1, 2002 incorporated a temperature control circuit for fan operation. This control circuit would activate fan operation when the unit reached a certain temperature and then shut the fan off when the unit cooled. Units built after May 1, 2002 have the control circuit removed thus allowing constant fan operation, resulting in a more stable internal temperature. Any units sent in to CEFD for repair also will have the control circuit bypassed.

Notes:

Chapter 5. DEMUX Option

This chapter describes the two DEMUX daughter card options that are supported by the SDR-54A.

5.1 DEMUX Overview

The SDR-54A DEMUX options, hereafter referred to as "the DEMUX 2/4" or the "DEMUX 8-Channel", are "daughter card" plug-in options for the demodulator.

The SDR-54A supports two DEMUX daughter card options:

- DEMUX 2/4
- DEMUX 8-Channel

The DEMUX 2/4 converts a single, aggregate-input data stream into two or four tributary output data streams. Aggregate-input data consists of interleaved tributary data and synchronization overhead added by a remote uplink multiplexer.

The DEMUX 2/4 is designed to operate in a 2- or 4-channel broadcast multiplexer system, and to inter-operate with Comtech EF Data's MUX24 multiplexer.

For more information on the MUX24, refer to *Comtech EF Data Specification SP/5231 SOSOFT 2/4 Channel Demux.*

The DEMUX 8-Channel converts the aggregate data stream into one to eight tributaries. Aggregate input data consists of interleaved tributary data and synchronization overhead added by a remote uplink multiplexer.

The DEMUX 8-Channel is designed to operate in a 1- to 8-channel broadcast multiplexer system, and to inter-operate with Comtech EF Data's 8-Channel multiplexer.

For more information on the DEMUX 8-Channel multiplexer, refer to the *Comtech EF Data Specification SP/6285 SDM-300A RX Reed-Solomon.*

5.2 DEMUX 2/4-Channel (Option)

5.2.1 Description

The (AS/5231) DEMUX 2/4 PCB, shown in Figure 5-1, is an option which plugs into the demodulator motherboard.

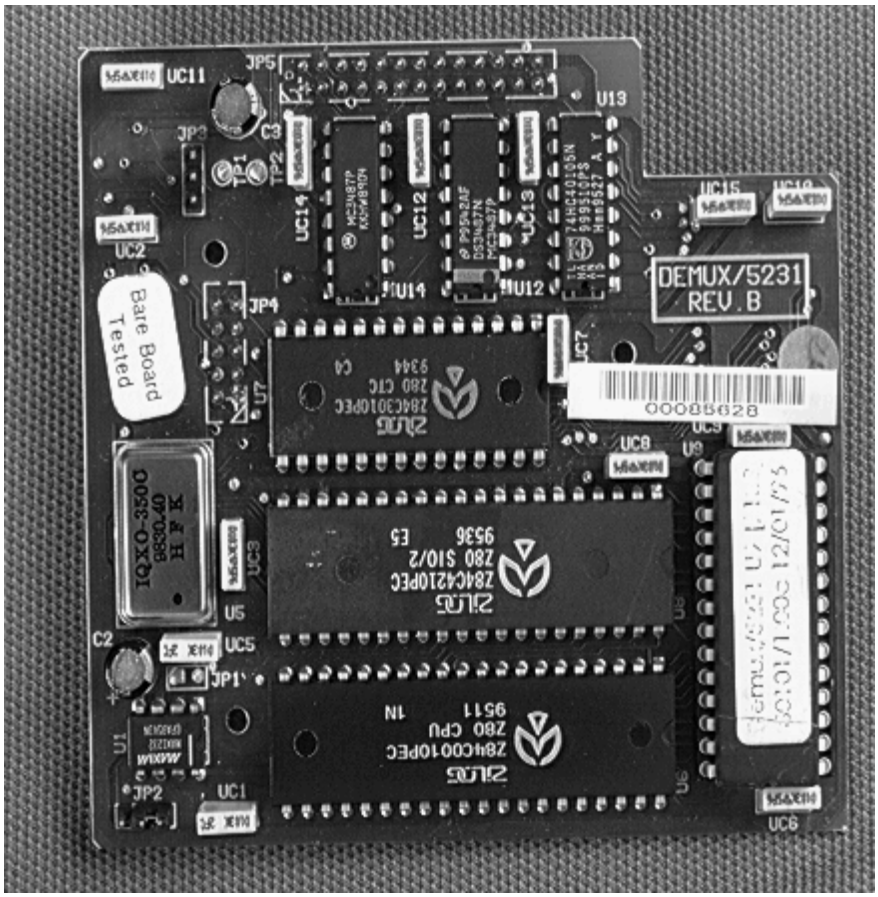

Figure 5-1. DEMUX 2/4 PCB

Note: The shunt on JP2 should always be positioned between pins 2 and 3.

5.2.2 Installation

Install the DEMUX 2/4 card as follows:

1. Remove the six 6-32 pan head screws (three on each side) which secure the cover to the chassis.

   Note: The cover and chassis are held together by flange tabs located on the top and bottom surfaces.

2. Remove the cover from the chassis as follows:

   a. Two extraction slots near the front of the unit are located on the top surface.

   b. Separate the chassis and cover by placing a screw driver into the extraction slots and twisting.

      Note: To remove the chassis from the cover, gently pry the chassis and cover away from each other.

   c. A ribbon connection between the front panel and the main PCB will allow for the removal of the chassis without disconnecting the front panel.

Use Electrostatic Discharge (ESD) precautionary procedures when touching, removing, or inserting PCBs.

3. Locate the DEMUX mounting location at the right rear of the demodulator PCB as shown in Figure 5-2.

4. Carefully remove the DEMUX PCB from the anti-static bag and plug it into position on the PCB as shown in Figure 5-2.

Be careful to not bend or break any of the DEMUX mounting pins when installing the PCB.

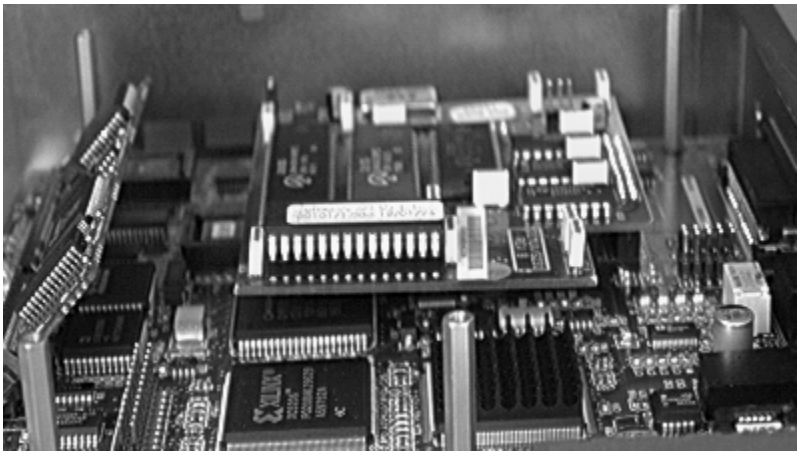

Figure 5-2. Installation of DEMUX 2/4 Card

CAUTION

Do not overtighten the screws. Damage to the DEMUX mounting pins could result.

5. Install three 2-56 screws and split lockwashers.

6. Install the top chassis as follows:

   a. Coat the 6 securing screws with a small amount of Loctite 425, instant adhesive.

   b. Position the top chassis in place, ensuring the tabs are aligned and secure.

   c. Press the top chassis into the bottom while ensuring the LED lights tubes and push-button switches are aligned.

CAUTION

Do not overtighten the 6 securing screws. Damage to the top chassis can occur.

   d. Secure the top chassis with the 6 screws, using a 5/64 hex driver.

5.2.3 DEMUX 2/4-Channel Specification

Table 5-1. Summary of DEMUX Specification

Parameter	Specification
DEMUX Type	Synchronous, symmetrical data rates on all tributaries
Tributary Channels	2 or 4, automatic detection
Tributary Data Interface	RS-422 or RS-232, 25-pin D-sub
Tributary Data Rate: 4-Channel Mode 2-Channel Mode Clock	 9.6 to 64.0 kbit/s, 32/129 of aggregate channel 9.6 to 128.0 kbit/s, 64/129 of aggregate channel 50% duty cycle, ± 10%, phase locked to aggregate channel
Synchronization Indicator	TTL, on interface connector (1 = SYNC)
Mode Indicator	TTL, on interface connector (0 = 2 channel mode)

5.2.4 Tributary Data Interface Connector RS-422 (J4)

Table 5-2. Tributary Data Interface Connector (RS-422)

Rear Panel 25-Pin D Connector		
J4	**DEMUX T1-4**	
Pin #	**Circuit**	**Description**
1	RXDaT1	Trib #1 data inverting output
14	RXDbT1	Trib #1 data non-inverting output
2	RXCaT1	Trib #1 clock inverting output
15	RXCbT1	Trib #1 clock non-inverting output
6	RXDaT2	Trib #2 data inverting output
19	RXDbT2	Trib #2 data non-inverting output
21	RXCaT2	Trib #2 clock inverting output
9	RXCbT2	Trib #2 clock non-inverting output
22	RXDaT3	Trib #3 data inverting output
10	RXDbT3	Trib #3 data non-inverting output
23	RXCaT3	Trib #3 clock inverting output
11	RXCbT3	Trib #3 clock non-inverting output
24	RXDaT4	Trib #4 data inverting output
12	RXDbT4	Trib #4 data non-inverting output
15	RXCaT4	Trib #4 clock inverting output
13	RXCbT4	Trib #4 clock non-inverting output
16	DMXSYNC	DEMUX synchronization indicator (TTL, 1 = SYNC)
5	DMXMD	DEMUX mode indicator (TTL, 0 = 2 channel mode)
7	GND	Ground
8	CDa	Carrier detect inverting
20	CDb	Carrier detect non-inverting
3	RXDa	Aggregate channel data inverting output (RS-422)
4	RXDb	Aggregate channel data non-inverting output (RS-422)
17	RXCa	Aggregate channel clock inverting output (RS-422)
18	RXCb	Aggregate channel clock non-inverting output (RS-422)

5.2.4.1 RS-232, 2/4-Channel Demultiplexer Option (J4)

Table 5-3. Tributary Data Interface Connector (RS-232) 25-Pin D-Sub (Female)

Pin #	Name	Signal Function
1	RXDT1	Trib #1 data output (RS-232)
2	RXCT1	Trib #1 clock output (RS-232)
6	RXDT2	Trib #2 data output (RS-232)
21	RXCT2	Trib #2 clock output (RS-232)
22	RXDT3	Trib #3 data output (RS-232)
23	RXCT3	Trib #3 clock output (RS-232)
24	RXDT4	Trib #4 data output (RS-232)
25	RXCT4	Trib #4 clock output (RS-232)
16	DMXSYNC	Demux synchronization indicator (TTL, 1 = SYNC)
5	DMXMD	Demux mode indicator (TTL, 0 = 2 channel mode)
3	RXD	Aggregate channel data output (RS-232)
17	RXC	Aggregate channel clock (RS-232)
8	CD	Carrier detect output
7	GND	Ground

5.3 DEMUX 8-Channel (Option)

5.3.1 Description

The (AS/5839) DEMUX 8-Channel PCB, shown in Figure 5-3, is an option which plugs into the demodulator motherboard. This DEMUX is designed to be used with the 8-Channel MUX (AS/5985) and the SDM-300/-300A Satellite Modem. The aggregate data rate selected on the SDR-54A must include the 1.3 kbps overhead.

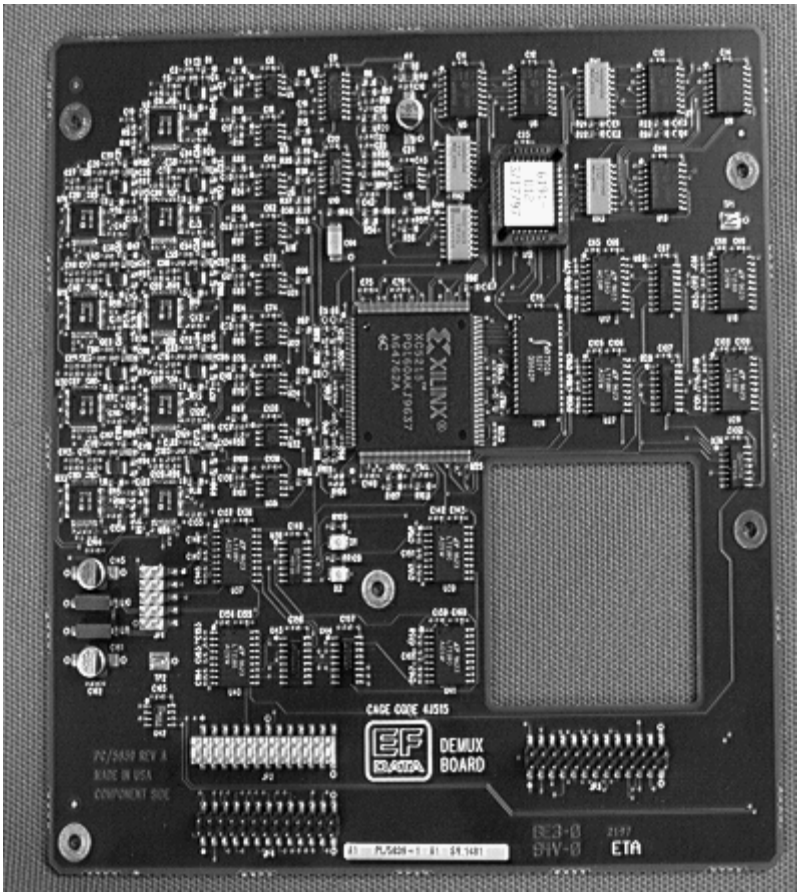

Figure 5-3. DEMUX 8-Channel PCB

5.3.2 Installation

Install the DEMUX 8-Channel card as follows:

1. Remove the six 6-32 pan head screws which secure the cover to the chassis.

   Note: The cover and chassis are held together by flange tabs located on the top and bottom surfaces.

2. Remove the cover from the chassis as follows:

   a. Two extraction slots near the front of the unit are located on the top surface.

   b. Separate the chassis and cover by placing a screw driver into the extraction slots and twisting.

      Note: To remove the chassis from the cover, gently pry the chassis and cover away from each other.

   c. A ribbon connection between the front panel and the main PCB will allow for the removal of the chassis without disconnecting the front panel.

Use Electrostatic Discharge (ESD) precautionary procedures when touching, removing, or inserting PCBs.

3. Install connector/ribbon assemblies at the J5 and J6 position as follows:

   a. Remove the two blank cover plates installed over J5 and J6 slots, located on the rear panel of the unit.

   b. Install the two 25-pin D-sub connector/ribbon cable assemblies to the rear panel of the unit.

   Note: The ribbon cable assemblies are of slightly different size:
   1. Install the longer ribbon cable assembly into J5.
   2. Install the shorter cable assembly into J6.

4. Locate the DEMUX mounting location at the right rear of the demodulator PCB, as shown in Figure 5-4.

5. Carefully remove the DEMUX 8-Channel PCB from the anti-static bag and connect the ribbon cable assemblies to JP3 and JP4 of the DEMUX 8-Channel PCB.

Be careful to not bend or break any of the DEMUX mounting pins when installing the PCB.

6. Plug the DEMUX 8-Channel card into position on the PCB, as shown in Figure 5-4.

Do not overtighten the screws. Damage to the DEMUX mounting pins could result.

7. Install four 4-40 screws and split lockwashers.

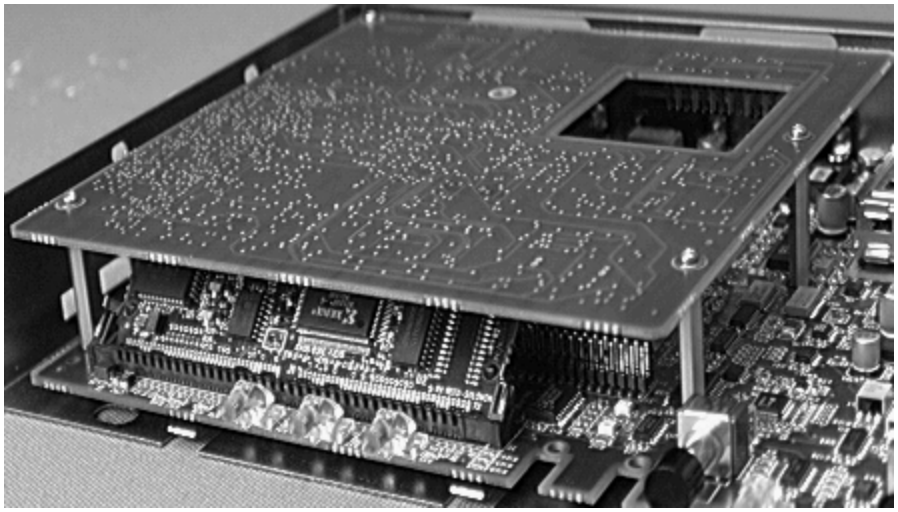

Figure 5-4. Installation of DEMUX 8-Channel Card

Do not overtighten the securing screws. Damage to the top chassis can occur.

8. Coat the six top chassis securing screws with a small amount of Loctite 425. Position the top chassis in place ensuring the tabs are aligned. Press the top chassis into the bottom while ensuring the LED light tubes and push-button switches are aligned. Secure the top chassis with the six screws, using a 5/64 hex driver.

5.3.3 DEMUX 8-Channel Specification

Table 5-4. DEMUX 8-Channel Specification

Parameter	Specification
Aggregate Input:	
Type	Synchronous (clock/data).
Data/Clock Interface	TTL (inverted data). Data valid on rising edge of clock.
Data Rate	4001.3 kbit/s maximum, the aggregate data rate is the sum of all tributary data rates plus the multiplex overhead.
Clock	50% duty cycle, ± 10%.
Multiplex Technique	Data interleaved time division.
Overhead	1.3 kbit/s fixed per frame.
Tributary Outputs:	
Number of Channels	1 to 8
Data Rate	600 bit/s to 4000 kbps, (configurable for each tributary in 100 bit/s increments). **Notes:** 1. RS-232 maximum data rate is 64 kbit/s. 2. The sum of all tributary data rates plus overhead cannot exceed the maximum aggregate data rate of 4001.3 kbit/s.
Type	Synchronous clock and data.
Data Interface	RS-422 or RS-232.
Clock	50% duty cycle, ± 10%, phase locked to aggregate clock input, 0.25 dB maximum jitter gain from aggregate clock input.
Lock Time	1 second maximum after demodulator Carrier Detect.
Operational BER Performance	Will lock and maintain synchronization with BER $\geq 10^{-3}$.
Input Power	5 VDC, ± 10%, 900 mA maximum.
Environmental:	
Operating Temperature	-20° to +60°C (-4° to 140°F)
Storage Temperature	-55° to +125°C (-67° to 257°F)
Humidity	≤ 95% Non-condensing.
Interface Connectors:	
JP1	+5 VDC power, aggregate data, I^2C communications to demodulator card.
JP2	Output sync and mode signals.
*JP3	26-pin header, for tributary interfaces 1 through 4.
*JP4	26-pin header, for tributary interfaces 5 through 8.
Breakout Panel	Optional: 1 RU breakout panel (UB-54) converts interface to eight 15-pin D sub connector for separate tributary interfaces.
Unit-to-Unit Delay Variation	< 10% of 1/tributary data rate for identically configured demultiplexers. **Note:** This is in addition to the delay variation of the base unit.

***Note:** JP3 and JP4 headers are connected to the rear panel 25-pin D connectors J5 and J6 respectively (refer to Section A.3.4).

Table 5-5. Monitor & Control Additions

Parameter	Condition	Specification
Configuration Parameter	TRIB Data Rate TRIB Interface Type TRIB Output Mapping TRIB Clock Phase TRIB Data Phase	0.6 to 4000 kbit/s RS-422 or RS-232 1 to 8 NRM or INV NRM or INV
Fault Status	DMX_SYNC	OK/FLT

5.3.4 Tributary Data Interface Connectors (J5 and J6)

For all interface types, the 8-channel demultiplexer adds two DB-25 connectors (J5 and J6) for tributary outputs.

Table 5-6. Tributary Data Interface Connector (J5)

Rear Panel 25-Pin D Connector		
J5	**DEMUX T1-4**	
Pin #	**Circuit**	**Description**
1	RD422A_1	RS-422, RX DATA (-), TRIB1
14	RD422B_1	RS-422, RX DATB (+), TRIB1
2	RC422A_1	RS-422, RX CLKA (-), TRIB1
15	RC422B_1	RS-422, RX CLKB (+), TRIB1
3	RD232_1	RS-232, RECEIVE DATA, TRIB1
16	RC232_1	RS-232, RECEIVE CLOCK, TRIB1
4	RD422A_2	RS-422, RX DATA (-), TRIB2
17	RD422B_2	RS-422, RX DATB (+), TRIB2
5	RC422A_2	RS-422, RX CLKA (-), TRIB2
18	RC422B_2	RS-422, RX CLKB (+), TRIB2
6	RD232_2	RS-232, RECEIVE DATA, TRIB2
19	RC232_2	RS-232, RECEIVE CLOCK, TRIB2
7	RD422A_3	RS-422, RX DATA (-), TRIB3
20	RD422B_3	RS-422, RX DATB (+), TRIB3
8	RC422A_3	RS-422, RX CLKA (-) ,TRIB3
21	RC422B_3	RS-422, RX CLKB (+), TRIB3
9	RD232_3	RS-232, RECEIVE DATA, TRIB3
22	RC232_3	RS-232, RECEIVE CLOCK, TRIB3
10	RD422A_4	RS-422, RX DATA (-), TRIB4
23	RD422B_4	RS-422, RX DATB (+), TRIB4
11	RC422A_4	RS-422, RX CLKA (-), TRIB4
24	RC422B_4	RS-422 ,RX CLKB (+), TRIB4
12	RD232_4	RS-232 ,RECEIVE DATA, TRIB4
25	RC232_4	RS-232, RECEIVE CLOCK, TRIB4
13	GND	GROUND

Table 5-7. Tributary Data Interface Connector (J6)

Rear Panel 25-Pin D Connector		
J6	**DEMUX T5-8**	
Pin #	**Circuit**	**Description**
1	RD422A_5	RS-422, RX DATA (-), TRIB5
14	RD422B_5	RS-422, RX DATB (+), TRIB5
2	RC422A_5	RS-422, RX CLKA (-), TRIB5
15	RC422B_5	RS-422, RX CLKB (+), TRIB5
3	RD232_5	RS-232, RECEIVE DATA, TRIB5
16	RC232_5	RS-232, RECEIVE CLOCK, TRIB5
4	RD422A_6	RS-422, RX DATA (-), TRIB6
17	RD422B_6	RS-422, RX DATB (+), TRIB6
5	RC422A_6	RS-422, RX CLKA (-), TRIB6
18	RC422B_6	RS-422, RX CLKB (+), TRIB6
6	RD232_6	RS-232, RECEIVE DATA, TRIB6
19	RC232_6	RS-232, RECEIVE CLOCK, TRIB6
7	RD422A_7	RS-422, RX DATA (-), TRIB7
20	RD422B_7	RS-422, RX DATB (+), TRIB7
8	RC422A_7	RS-422 ,RX CLKA (-), TRIB7
21	RC422B_7	RS-422, RX CLKB (+), TRIB7
9	RD232_7	RS-232, RECEIVE DATA, TRIB7
22	RC232_7	RS-232, RECEIVE CLOCK, TRIB7
10	RD422A_8	RS-422, RX DATA (-), TRIB8
23	RD422B_8	RS-422, RX DATB (+), TRIB8
11	RC422A_8	RS-422, RX CLKA (-), TRIB8
24	RC422B_8	RS-422, RX CLKB (+), TRIB8
12	RD232_8	RS-232, RECEIVE DATA, TRIB8
25	RC232_8	RS-232, RECEIVE CLOCK, TRIB8
13	GND	GROUND

Table 5-8. Aggregate Data and Clock

Pin #	Signal Function	Name
3	Receive data inverting output (RS-422)	RXDa
4	Receive data non-inverting output (RS-422)	RXDb
7	Ground	GND
8	Carrier detect inverting	CDa
17	Receive clock inverting output (RS-422)	RXCa
18	Receive clock non-inverting output (RS-422)	RXCb
20	Carrier detect non-inverting output (RS-422)	CDb

Chapter 6. Reed-Solomon Option

6.1 Introduction

The Reed-Solomon (AS/6285) assembly is a 1.2 x 4.2 inch (3.04 x 10.7 cm) daughter card for the SDR-54A. Refer to Figure 6-1.

Figure 6-1. Reed-Solomon Card

Design guidelines are in accordance with IESS-308/309 (refer to Table 6-1).

Options for the Rx required Reed-Solomon PCB contain the following

- Self-synchronizing Descrambler
- Variable Deinterleaver Depth (8 or 16)

6.2 Descrambler

The descrambler used in the Reed-Solomon assembly is a 2^{20}-1 descrambler. It has an adverse state detector, reset by XOR' ing bits 11 and 19. The adverse state detector counts from 0 to 31. At count 31, it inserts a one into the descrambler. The tap points into the descrambler are 0 and 17. The data is inverted before it is sent through the descrambler. Refer to Figure 6-2, which shows a block diagram of the V.35 Self-Synchronizing Descrambler.

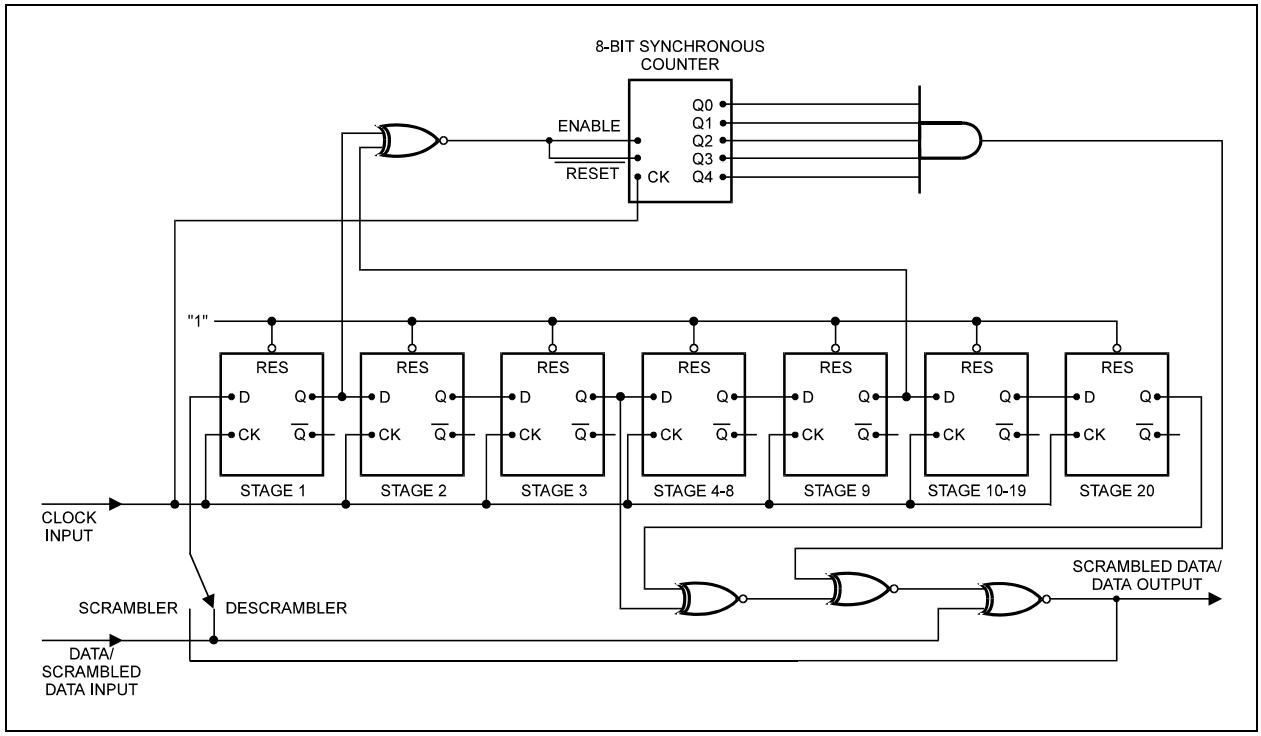

Figure 6-2. V.35 Self-Synchronizing Descrambler

6.3 Deinterleaver

The unique words inserted by the encoder are used by the decoder to detect the frame boundary for synchronization of the descrambler and the deinterleaver. The deinterleaver operates in a similar manner as the interleaver, except that it writes scrambled and R-S encoded data (with checkbytes) into a static ram in column format, and reads in row format. The result is data in the original RS code word format. See Figure 6-3 for the R-S Code Word after deinterleaving.

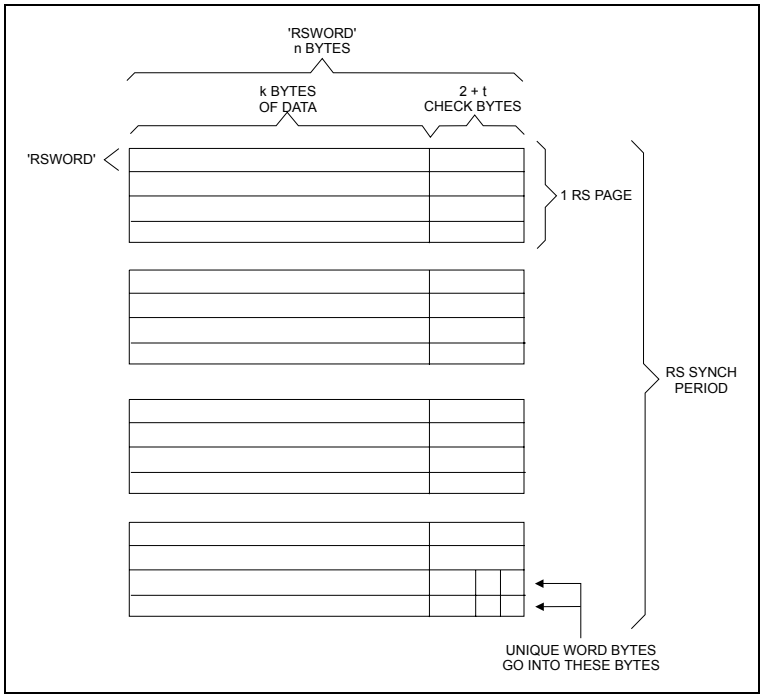

Figure 6-3. R-S Code Word Format

6.4 Reed-Solomon Codec

The design implements R-S decoding by utilizing the Advanced Hardware P/N AHA4011B chip set. Refer to Table 6-1 for R-S codes.

Table 6-1. R-S Codes

Service	Data Rate (kbit/s)	R-S Code (n, k, t)
Closed Network	4.8 to 4375 kbps	225, 205, 10

Note: Reed-Solomon concatenated decoding is compatible with the Comtech EF Data SDM-300 Series or SDM-8000 modems.

6.5 Reed-Solomon Installation

Install the Reed-Solomon card as follows:

1. Remove the six 6-32 pan head screws which secure the cover to the chassis.

   Note: The cover and chassis are held together by flange tabs located on the top and bottom surfaces.

2. Remove the cover from the chassis as follows:

   a. Two extraction slots near the front of the unit are located on the top surface.

   b. Separate the chassis and cover by placing a screw driver into the extraction slots and twisting.

      Note: To remove the chassis from the cover, gently pry the chassis and cover away from each other.

Use Electrostatic Discharge (ESD) precautionary procedures when touching, removing, or inserting PCBs.

3. Gently insert the Reed-Solomon card into the socket, with the card-edge (the side with the silver strips and 'RX Reed-Solomon') facing downward.

4. Carefully apply a slight amount of pressure downward on the top of the card, until it snaps into position in the connector socket's retaining clips.

Note: The correct position of a properly installed AS/6285 Reed-Solomon card is standing nearly upright, tilting at a slight angle, as shown in Figure 6-4.

Do not overtighten the securing screws. Damage to the top chassis can occur.

5. Position the top chassis in place ensuring the tabs are aligned. Press the top chassis into the bottom while ensuring the LED light tubes and push-button switches are aligned. Secure the top chassis with the six screws, using a driver.

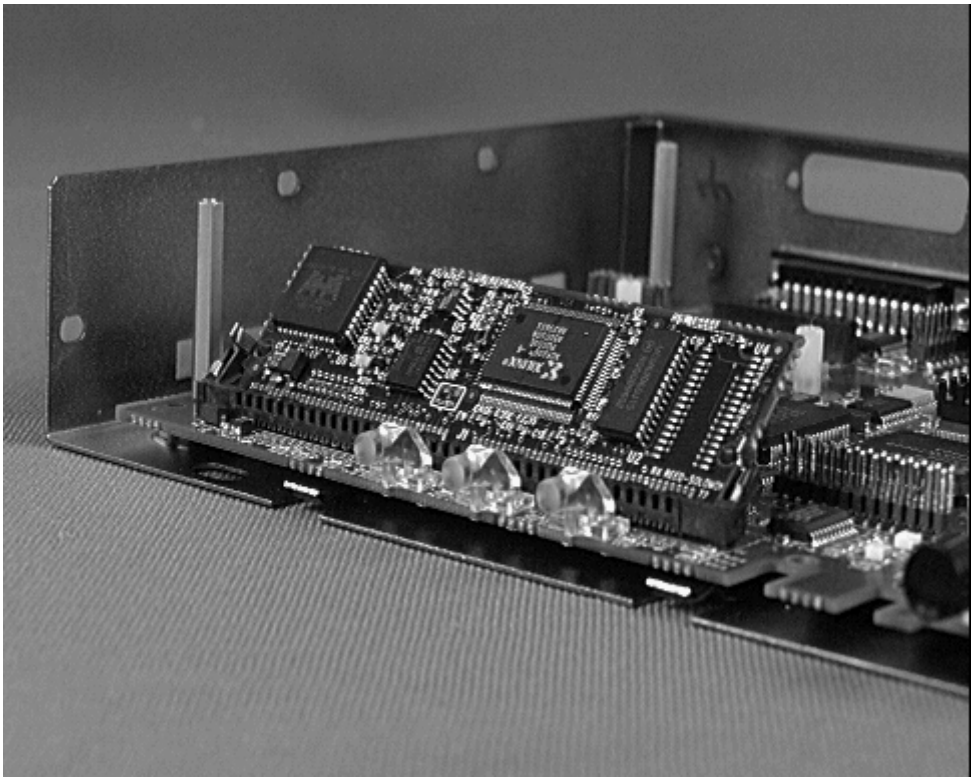

Figure 6-4. Installation of Reed-Solomon Card (AS/6285)

6.6 Functionality

6.6.1 Correlator

On the Rx (decoder) side, the correlator searches for unique words from the R-S frame. The correlator starts in hunt mode, searching for the first two bytes of the unique word. Upon detection of the first two bytes of the unique word, the correlator searches for the next two bytes of the unique word. When all four bytes of the unique word are found, an up/down counter is incremented. The correlator acknowledges a locked condition when the up/down counter reaches a maximum count of 16.

Once the counter starts counting up, a missing byte of the unique word causes the counter to count down. The counter must count down to zero before entering the hunt mode again, offering some compliance for noise in the system.

After a locked condition is reached, the correlator uses the known frame sync position to synchronize the counters that generate the deinterleaver addresses, W/R selects, and the descrambler synchronization. The correlator converts the input data stream to an 8-bit parallel byte format for processing by the deinterleaver and R-S decoder.

6.6.2 Error Detection

The decoder provides a means to check for uncorrectable R-S blocks. The decode Xilinx monitors the CRTN line out of the R-S decoder. CRTN is valid during the first byte of each R-S block. CRTN is programmed such that a low indicates that the incoming R-S block of data was correctable.

- If CRTN is high during the first byte, then the upcoming R-S block of data exceeded the correction capability of the R-S decoder.
- If the block is uncorrectable, the data is passed through the decoder as received, meaning no correction was performed on that block of data.

The decode Xilinx monitors the CRTN line and latches a status line on any high state. Approximately once every second, the M&C reads the status line and reports any UAS (unavailable seconds) as a stored fault on the modems front panel. The status line is cleared every time the M&C reads the status.

Refer to Figure 6-5 for a block diagram of the Reed-Solomon Decoder section.

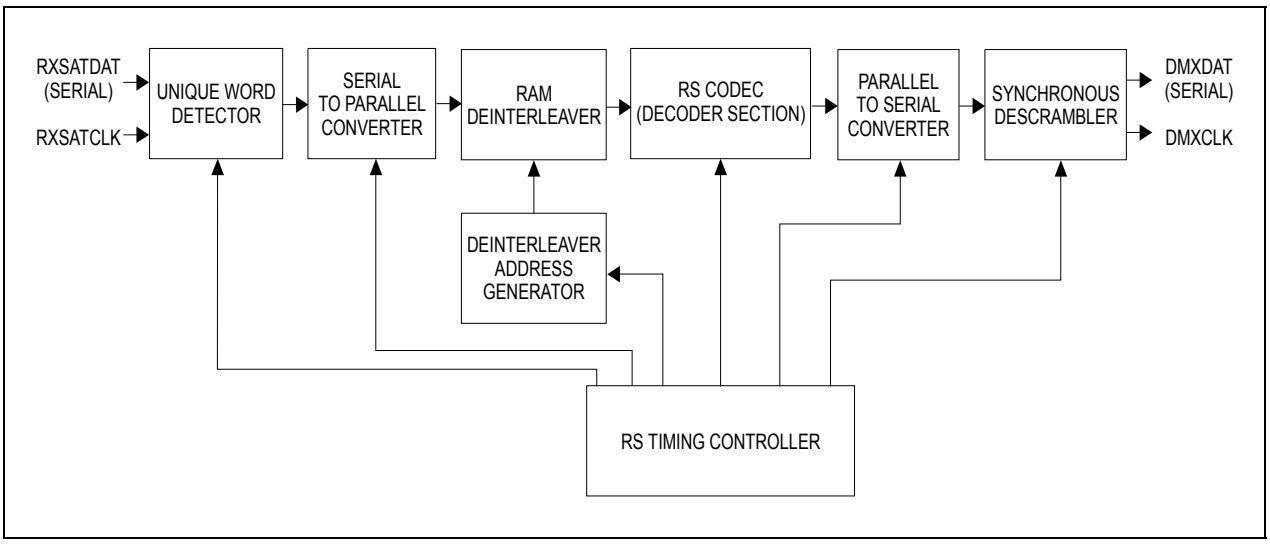

Figure 6-5. Reed-Solomon Decoder Section Block Diagram

6.7 BER Performance

Table 6-2. BER Performance Curve Data

E_b/N_0 (dB) Specification			
BER	**1/2 Rate**	**3/4 Rate**	**7/8 Rate**
10^{-6}	N/A	5.6	6.7
10^{-7}	N/A	5.8	6.9
10^{-8}	N/A	6.0	7.1
10^{-10}	5.0	6.3	7.5

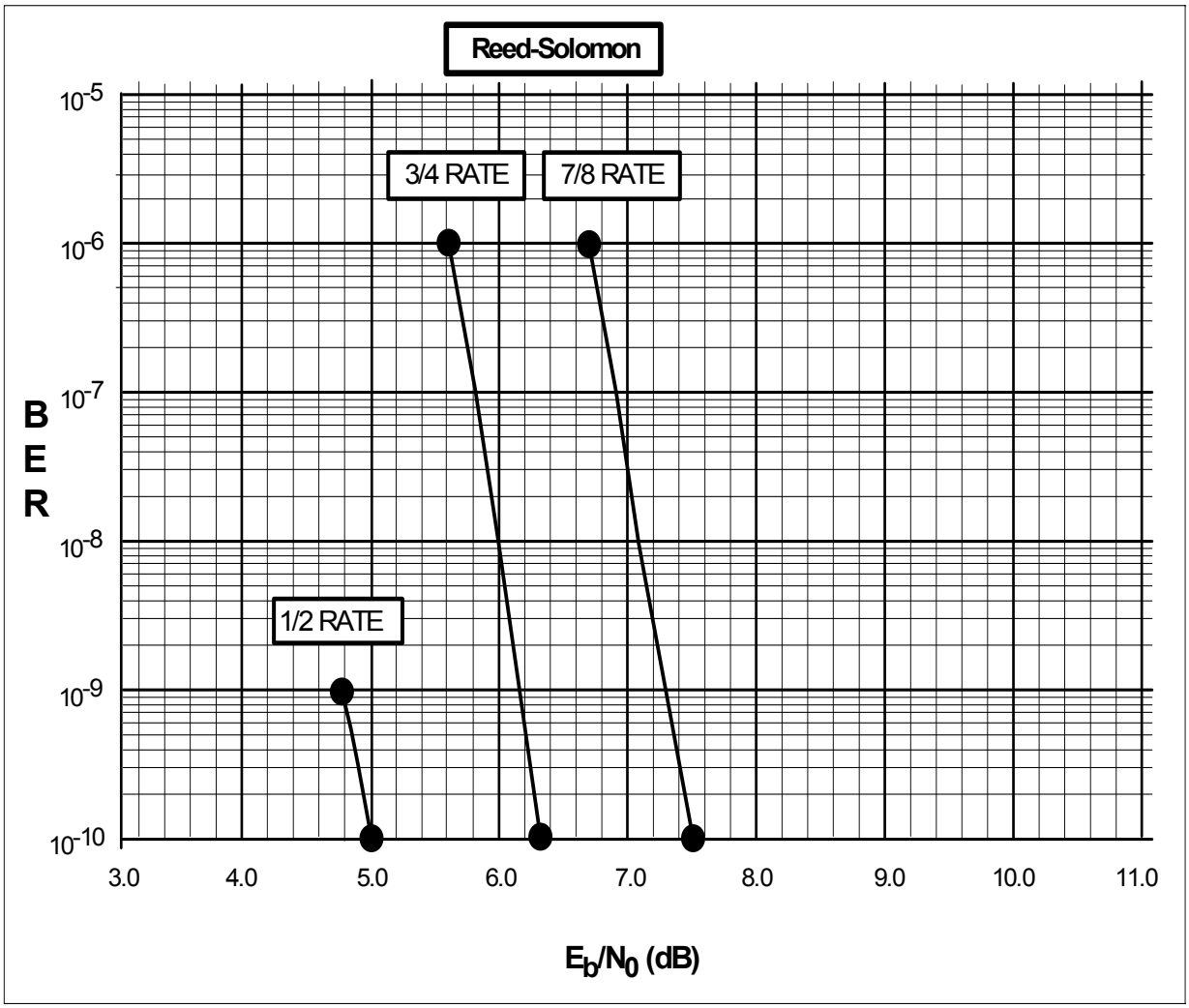

Figure 6-6. BER Performance with Noise, Viterbi Decoder, and Reed-Solomon (Optional)

6.7.1 Specification

Table 6-3. Reed-Solomon Specifications

Decoder Type	IESS 308 Polynomial
Deinterleaver Type	IESS 308 Block (modified)
Deinterleaver Depth	8 or 16
RS Code Words	225,205,10
Descrambler	Modified V.35 Self Synchronizing

6.7.2 Interface Connector

Connector type 72-pin simm.

Table 6-4. Interface Connector

Pin #	Signal	Description
1 to 4, 69 to 72	GND	Ground
5 to 8, 65 to 68	+5V	+5V
9 to 11	Spare 0-2	NC
12 to 15	RS_SPR3-6	Spares from FPGA
16, 17	Spare 3, 4	NC
18	TXDAT	NC (Pull up)
19	TXCLK	NC (Pull up)
20 to 22	Spare 5-7	NC
23	SCT_OUT	NC
24	Spare 8	NC
25	DEC_DAT	(RS) Data to Main
26	DEC_CLK	(RS) Clock from Main
27	RS_DAT	RX Data from Main
28	RS_CLK	RX Clock from Main
29	Spare 9	NC
30	/TRS_EN	NC
31	/RS_CS	RS Chip Select
32	Spare 10	NC
33	SDA	IIC Port Expander Data
34	SCL	IIC Port Expander Clock
35	Spare 11	NC
36 to 43	BAD[0..7]	M&C Address/Data Bus
44	Spare 12	NC
45	BALE	M&C Buffer ALE
46	/BRD	M&C Buffer Read
47	/BWR	M&C Buffer Write
48	Spare 13	NC
49	RSXLX_CLK	25 MHz Clock RS Xilinx
50	Spare 14	NC
51	AHA_CLK	25 MHz Clock RS Decoder
52	RS_SPR7	NC
53	RI_SP	NC
54	RR_SP	NC
55	RT_SP	NC
56	RS_SPR8	NC
57 to 59	TXPA0-TXPA2	NC
60	RS_SPR9	NC
61 to 63	RXPA0-RX_PA2	ID
64	RS_SPR10	NC

Notes:

Chapter 7. Fully Accessible System Topology (FAST)

This appendix describes the Fully Accessible System Topology (FAST) option available for the demodulator.

7.1 FAST Accessible Options

Comtech EF Data's FAST system allows immediate implementation of different options through the user interface keypad. Some FAST options are available through the basic platform unit, while others require that the unit is equipped with optional hardware, or that the hardware be installed in the field.

The options available through the FAST architecture include:

- Variable Data Rates

Other options are available through conventional changes, such as installing daughter card PCBs. Refer to Section D.2, Conventional Options, for additional information.

7.2 FAST System Theory

FAST is an enhancement feature available only in Comtech EF Data products, enabling on-location upgrade of the operating feature set—in the rack—without removing a modem from the setup. When service requirements change, the operator can upgrade the topology of the modem to meet those requirements within minutes after confirmation by Comtech Ef Data. This accelerated upgrade can be accomplished only because of FAST's extensive use of programmable devices incorporating Comtech Ef Data-proprietary signal processing techniques. These techniques allow the use of a unique access code to enable

configuration of the available hardware. The access code can be purchased at any time from Comtech Ef Data. Once obtained, the access code is loaded into the unit through the front panel keyboard or the rear remote port.

With the exclusive FAST technology, operators have maximum flexibility for enabling functions, as they are required. FAST allows an operator to order a modem precisely tailored for the initial application, reducing risk and cost overruns during the application integration process.

7.3 Implementation

FAST is factory-implemented in the modem at the time of order. Hardware options for basic modems can be ordered and installed either at the factory or in the field. The operator can select options that can be activated easily in the field, depending on the current hardware configuration of the modem.

7.3.1 Activation Procedure

1. Obtain Demodulator serial number as follows:

   a. Establish a connection to M&C REMOTE port.

   b. [ENTER] <1/SNUM_'cr'

   c. Record the following serial numbers as follows.

   - Record Modem Serial Number: _____.
   - Record Card #1 Serial Number: _____.
   - Record Card #2 Serial number: _____.

   d. [ENTER] <MOI_'cr' to view available features.

Single Rate	[ ]	Card #1	[ ]
Low Rate Variable	[ ]	Card #2	[ ]
Full Rate Variable	[ ]		

Notes:

1. If the menu displays a "0", the unit will need to be returned to the manuafacturer for desired hardware upgrade.
2. If the menu displays an "X", the unit can be upgraded in the field.
3. If the unit displays a "+", the feature is installed.
4. If the unit displays a "-", the feature is FAST accessible.

e. Press [CLEAR].

f. [ENTER] <1/C10I_'cr' to select Card #1 (Overhead Card) options.

4-Channel	[ ]	8-Channel	[ ]

g. [ENTER] <1/C20I_'cr' to select CARD #2 (Reed-Solomon Card) options.

INTELSAT	[ ]

h. Contact an Comtech EF Data Sales Representative to order desired features.

i. Comtech EF Data Customer personnel will verify the order and provide an invoice and instructions.

Notes:

Chapter 8. Specifications

8.1 Specifications

Table 8-1. Demodulator Specifications

Parameter	Specification
RF Input Frequency Range	950.0 to 1550.0 MHz, in graduated 10 kHz steps
RF Input Level: Typical Guaranteed	 -90 to -30 dBm -80 to -30 dBm Notes: For symbol rates < 64 kbps, input is –40 dBm max. For symbol rates > 2048 ks/s, input level is –75 dBm min. For all other symbols rates, the typical absolute input is –90 dBm min.
RF Input Impedance	75Ω with a retun loss of ≥ 8 dB return loss
RF Input Return Loss (950.0 to 1550.0 MHz): Typical Guaranteed	 >10 dB > 8 dB
RF Input Connector	F type (female)
LNB Power	+24 ± 1 VDC (500 mA maximum)
Baseband Filtering	4-Pole Butterworth, EFData Closed, Intelsat open
Demodulation	Coherent QPSK and BPSK (selectable)
Acquisition Range	10 kHz to 1 MHz, programmable in 10 kHz increments, range is rounded to nearest multiple of the operating symbol rate.
Symbol Rate Range (variable)	9.6 to 2500.0 kbps
Data Rate Change (variable): QPSK BPSK	 9.6 to 4000.0 kbps, in 1.0 bps steps 4.8 to 1250.0 kbps, in 1.0 bps steps Note: For RS-232 interface, maximum data rate = 64 kbps.
Forward Error Correction	Viterbi K = 7 decoder, 1/2 rate, 3/4 rate, and 7/8 rate Optional: Reed-Solomon IESS308/309 Concatenated 225, 205 T=10

Table 8-1. Specifications (Continued)

Parameter	Specification
Bit Error Rate: Viterbi 1/2 rate: Typical Guaranteed Viterbi 1/2 Rate with Reed-Solomon	 1 x 10^{-8} for E_b/N_0 6.7 dB 1 x 10^{-8} for E_b/N_0 7.2 dB 1 x 10^{-10} for E_b/N_0 5.0 dB
Ambiguity Resolution Method	Differential decoder
Descrambling	CCITT V.35 INTELSAT modified. Modified V.35 Self-Synchronizing (Closed Network RS option). None.
Deinterleaver (RS Codec)	Depth 8 Depth 16 **Note:** Hardware designed to attempt to support variable depth.
Differential Decoder	Selectable On or Off
Composite Input Power, maximum	Composite Input Power is –8.
Data Interface: Connector Type	Synchronous RS-232 and RS-422 (selectable) 25-pin sub-D (female) rack mount, desktop
Clock Jitter	2.0 dB maximum jitter gain, 4% RMS of 1/symbol rate absolute.
Status LEDs	Power, carrier lock, fault, and LNB power
Certification	The demodulator shall be both CE mark and FCC certified. CE mark testing will be done for Conducted and Radiated Emissions per EN55022. Radiated immunity will be tested per EN50082-1. Low voltage directive safety will be tested per EN60950. The unit will be tested per FCC Part 15 Class B.

Note: Warm up periods are required for the folowing operating temperature:
0 to 60°C 15 minutes, approximately
0°C 45 minutes, approximately

Table 8-2. Environmental and Physical Specifications

Parameter	Specification
Environmental: Operating Temperature: Desktop Rack Mount Temperature (Storage) Humidity (non-condensing)	 0° to +50°C (+32° to +122°F) -20° to +60°C (-4° to +140°F) -40° to +70°C (-40° to +158°F) 0 to 95% at 40°C (40°F)
Frequency Stability: Standard High-Stability	 ±15 ppm ± 0.5 ppm
Dimensions: Desktop Rack Mount (1RU)	 17.36W x 2.04H x 8.35D in. (44.1W x 5.2H x 21.2D cm) 19W x 1.75H x 8.35D in. (48.3W x 4.4H x 21.2D cm)
Unit-to-Unit Delay Variation	< 2.3% of 1 (data rate) for R 1/2 only, without Reed-Solomon concatenated decoder. < 1μs for symbol rates 19.2 to 800 ks/s < 1μs for symbol rates < 19.2 ks/s

8.1.1 Prime Power Interface

The demodulator will not exceed a total power consumption of 40W. The demodulator card receives the following prime power supplies:

+5V Supply	+5 VDC, ± 5% at 2.0A
+12V Supply	+12 VDC, ± 5% at 1.2A
-12V Supply	-12 VDC, ± 5% at 0.5A

For rack mount and desktop configurations, the power consumption shall not exceed 40W. The input will be as follows:

AC	90 to 132 VAC or 175 to 264 VAC, 47 to 63 Hz	IEC Connector
DC (Option)	48 or 24 VDC, ± 5% at TBDA	3-position Terminal block

8.1.2 Desired Carrier Input Power

For symbol rates > 2048 ks/s, the desired carrier input power is –75 to –30 dBm guaranteed.

- For symbol rates from 64 to 2048 ks/s, the desired carrier input power is –80 to –30 dBm guaranteed.
- For symbol rates < 64 ks/s, the desired inpout power is –80 to –40 dBm guaranteed.
- For all symbol rates, the typical absolute minimum input is –90 dBm.

8.1.3 Composite to Desired Input Power

The composite to desired ratio is 47 dB with a carrier of 9.6 ks/s wide (-55 dBm maximum input) and 24 dB with a carrier of 2500 ks/s wide (-32 dBm maximum input).

8.1.4 IF Input Shape

The basic spectral mask is equivalent to a 4-pole Butterworth, and is compatible with the SDM-51, -52 products. The demodulator is designed such that other spectral shaping is accommodated with firmware upgrades.

Examples are IESS Open Network and Comtech EF Data Closed Network filtering. Up to four different filter types are programmed/selected via the M&C interface.

8.1.5 Adjacent Channel Interface Performance

The degradation in performance in terms of Eb/No shall not exceed 0.5 dB as a result of adjacent channel interference caused by the presence of two simultaneous adjacent channels. The channels are similar to the desired but up to 6 dBc higher in power. The channel spacing varies as follows:

QPSK	± 1.3 x symbol clock
BPSK	± 1.3 x symbol clock

8.1.6 Frequency Stability

The frequency stability of the standard configuration is ± 15 ppm. The high-stability option provides for a frequency stability of ± 0.5 ppm.

8.2 Digital Data Rates

The data rate (Table 8-3) for the demodulator is programmable in 1 bps steps. The symbol rate is automatically calculated based on demodulation type and FEC coding. Any data rate entered that exceeds data rate or symbol rate specifications will be rejected. The demodulator is capable of supporting symbol rates from 9.6 kbps to 2.5 Ms/s. This corresponds to data rates as follows:

Table 8-3. Digital Data Rates

Modulation	FEC	Data Rate
BPSK	1/2 Viterbi	4.8 to 1250 kbps
QPSK	1/2 Viterbi	9.6 to 2500 kbps
QPSK	3/4 Viterbi	14.4 to 3750 kbps
QPSK	7/8 Viterbi	16.8 to 4000 kbps
BPSK	1/2 Viterbi & Reed-Solomon	4.8 to 1138 kbps
QPSK	1/2 Viterbi & Reed-Solomon	9.6 to 2277 kbps
QPSK	3/4 Viterbi & Reed-Solomon	14.4 to 3416 kbps
QPSK	7/8 Viterbi & Reed-Solomon	16.8 to 3986 kbps

Note: For RS-232 data interface, maximum data rate = 64.0 kbps.

8.2.1 Demodulation and FEC Decoding Types

The following combinations (Table 8-4) of demodulation and forward error correction decoding are available:

Table 8-4. Demodulation and FEC Decoding Types

Decoder	Code Rate	Demodulation
Viterbi, K7	1/2	BPSK
Viterbi, K7 Reed-Solomon	1/2 225/205	BPSK
Viterbi, K7	1/2, 3/4, 7/8	QPSK
Viterbi, K7 Reed-Solomon	1/2, 3/4, 7/8 225/205	QPSK

Note: Hardware designed to attempt to support programmable R-S Code words.

8.2.2 BPSK and QPSK BER Performance with Noise

BER performance for the receiver for QPSK and BPSK modulation types is shown in Table 8-5 and Figure 8-1.

Table 8-5. BPSK and QPSK BER Performance

	E_b/N_0 (dB) Specification		
BER	1/2 Rate	3/4 Rate	7/8 Rate
10^{-3}	N/A	5.2	6.4
10^{-4}	4.8	6.0	7.2
10^{-5}	5.5	6.7	7.9
10^{-6}	6.1	7.5	8.6
10^{-7}	6.7	8.2	9.2
10^{-8}	7.2	8.8	9.9

8.2.3 QPSK and BPSK Performance with Noise and Reed-Solomon

BER performance for the receiver for QPSK and BPSK modulation type with Reed-Solomon is shown in Table 8-6).

Table 8-6. QPSK and BPSK BER Performance with Reed-Solomon

	E_b/N_0 (dB) Specification		
BER	1/2 Rate	3/4 Rate	7/8 Rate
10^{-6}	N/A	5.6	6.7
10^{-7}	N/A	5.8	6.9
10^{-8}	N/A	6.0	7.1
10^{-10}	5.0	6.3	7.5

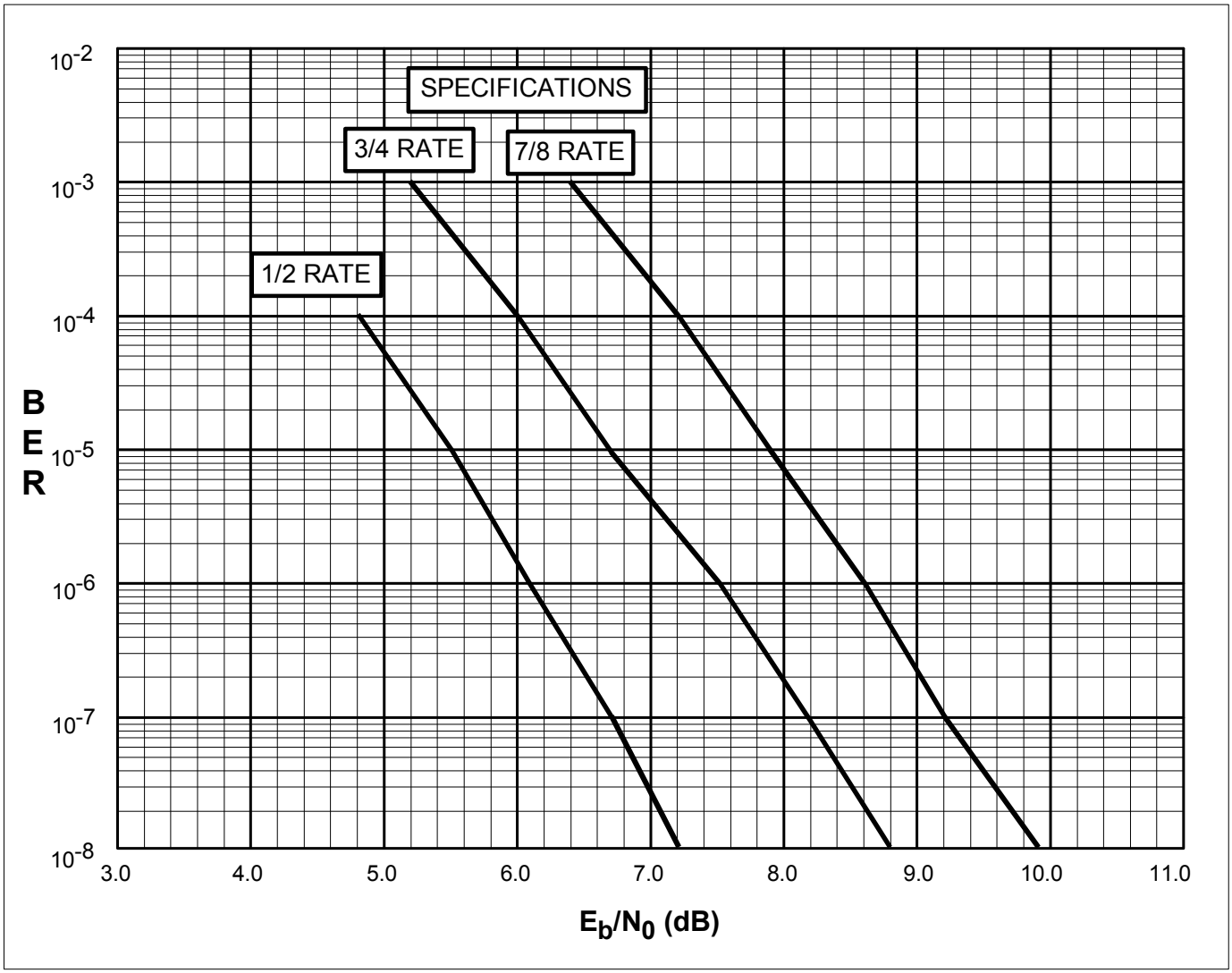

Figure 8-1. BPSK and QPSK BER Performance

8.3 Carrier and Clock Acquisition Time

Table 8-7. Carrier and Clock Acquisition Time

Viterbi			
Symbol Rate Range		BPSK Time	QPSK Time
512K ≤	R_s < 2500K	≤ 2.55 sec	≤ 2.55 sec
178K ≤	R_s < 512K	≤ 20.0 sec	≤ 10.0 sec
70K ≤	R_s < 178	≤ 5 sec	≤ 10 sec
40K ≤	R_s < 70K	≤ 25 sec	≤ 50 sec
19.2K ≤	R_s < 40K	≤ 55 sec	≤ 1100 sec
	R_s < 19.2K	< 110 sec	< 220 sec

The receiver will acquire carrier and data clock synchronization from continuous transmissions only from a randomly modulated portion of the received transmission (i.e., without preamble) with a probability of success of greater than 95% per Table 8-7.

The above probability of success is met under the following worst case conditions:

- The input E_b/N_0 is no less than 6.0 dB for 1/2 rate coding, 7.4 dB for 3/4 rate, and 8.5 dB for 7/8 rate.
- Carrier frequency uncertainty of ± 30 kHz.
- Data clock frequency error of ± 100 PPM.

8.3.1 Received IF Carrier Acquisition Range

The acquisition range of the demodulator is programmed from 10.0 kHz to 1 MHz, in steps of 10 kHz.

8.3.2 Received Data Clock Frequency Error

The data clock frequency error of the signal applied to the demodulator input must not exceed ± 100 PPM.

8.4 Signal Level Indication for Antenna Pointing

The receiver provides the AGC control signal as an output to aid the user in coarse pointing the antenna towards the satellite. The AGC control signal is provided both as an analog signal, and as a digital value through the M&C interface (per the M&C interface specification). The analog signal is a buffered DC output, proportional to the receive signal level, available on the front panel M&C connector at 10 mA maximum, 0 to 5V.

For fine antenna pointing, the estimated E_b/N_0 value will be used. The E_b/N_0 value is available to the host computer or terminal via the M&C interface.

8.5 Unit-to-Unit Delay Variation

The demodulator will have a unit-to-unit delay variation for rate 1/2 only, as follows without Reed-Solomon.

Symbol Rate Range	Delay Variation
19.2k ≤ RS ≤ 800K	1 μS
RS < 19.2K	2 μS

8.6 Monitor and Control (M&C) Specification

Refer to (Table 8-8) for M&C specifications.

Table 8-8. Monitor and Control Specifications

Parameter	Specification
Interface	Asynchronous RS-232
Connector Type	9-pin sub-D (female)
Baud Rate	9600 bps
Data Format	11 bits/characters: 7 data, 2 stop, 1 start, and 1 parity
Parity	Even
Configuration Parameters:	
BER Threshold	1E-3 to 1E-8 or None
Code Rate (1/2, 3/4, or 7/8)	QPSK or BPSK (1/2, 3/4, and 7/8)
Data Rate	4.8 to 4375 kbps
Data Inhibit	ON/OFF
Demodulation Type	INTELSAT Open, CEFD Closed, SDM-51
Demux Tributary Clock Phase Demux	INV/NRM
Tributary Data Rate	600 bps to 4 Mbps
Demux Tributary Data Phase	INV/NRM
Demux Tributary Interface Type	RS-232 or RS-422
Demux Tributary Output Mapping	1 to 8
Descrambler Decoder	Enable
Differential Decoder	Enable
L-Band Frequency	950.0 to 1550.0 MHz
LNB Power Mon:	Low Limit: 0 to 500 mA/High Limit: 0 to 500 mA
Reacquisition Time	0 to 99 seconds
Reed-Solomon Decoder	ON/OFF
Reed-Solomon Deinterleaver Depth	8 or 16
SLRC Group Address	0 to 255
SLRC Individual Address	0 to 65535
Spectral Rotation	INV/NRM
Sweep Range	10.0 to 1000 kHz
Sweep Reset	Stop Sweep
Non-volatile Configuration Storage	Configuration retained without prime power for at least 1 year
Fault Status	BER Threshold Carrier Detect Demux Module/Lock DSP Active FPGA Program LNB Power Reed-Solomon Module/Lock RF LO Lock Detect
Monitor Status	Corrected BER E_b/N_0 Raw BER Receive Frequency Offset Receive Signal Level
System Status	DSP Firmware/ASIC Configuration Data Equipment Type FPGA Firmware M&C Firmware

8.6.1 M&C Interface Connector(s)

The M&C interface is an Asynchronous, RS-232 interface on a 9-pin female D-sub connector. The connector is located on both the front and back of the rackmount configuration and on the back of the desktop configuration. The connectors in the rackmount and desktop configurations are wired in parallel. Commands can be issued from either port, but the user must verify that commands will not be issued simultaneously. Status messages will be sent to both ports simultaneously.

8.6.2 M&C Interface Configuration

The M&C interface is configured for 9600 baud, 7 data bits, 1 parity bit (even), and 2 stop bits.

8.6.3 M&C Communications

Commands and data are transferred on the M&C communications link as US ASCII-encoded character strings.

The M&C communications link is operated in a half-duplex mode.

Communications on the remote link are initiated by a remote controller or terminal. The receiver never transmits data on the link unless it is commanded to do so.

8.6.4 M&C Message Formats

The message formats for the M&C interface are described in the *SDR-54A Installation and Operation Manual* (draft available).

8.7 Monitored Signals

The operator can read one of the following, continually updated, performance monitors:

- Receive signal level
- Raw BER
- Corrected BER
- E_b/N_0
- Receive frequency offset

8.8 Faults Monitored

The faults monitored by the M&C and the resulting action taken are as follows:

FPGA Program	FAULT LED	TTL-OC	FORM-C
DSP Active	FAULT LED	TTL-OC	FORM-C
RF LO Lock Detect	FAULT LED	TTL-OC	FORM-C
BER Threshold	FAULT LED	TTL-OC	FORM-C
Carrier Detect	LOCK LED		
LNA Power	FAULT LED	TTL-OC	FORM-C
	LNB-POWER LED		
DMX Module/Lock	FAULT LED	TTL-OC	FORM-C
RS Module/Lock	FAULT LED	TTL-OC	FORM-C

The operator can also read the fault status via the M&C interface.

The TTL open collector fault signal and the Form-C contact closure signals are available on the Fault connector.

An optional LNB power current monitor is available.

8.9 Fault Status

The operator can read the following Fault Status information via the M&C interface:

SLRC Address (group or local)	**Remark**
Carrier Detect	OK/FLT
BER Threshold	OK/FLT
RF SYNC Lock Detect	OK/FLT
FPGA Load	OK/FLT
DSP Comm	OK/FLT
LNB Power	OK/FLT/OFF
DEMUX	OK/FLT/OFF
Reed-Solomon	OK/FLT

8.10 Space Link Remote Control (SLRC) Specifications

The Space Link Remote Control operation is described in Comtech EF Data specification SP/5487. The following is a summary of demodulator configuration parameters that can be controlled via SLRC:

Parameter	Specification
BER Threshold	3 to 8 or FF (Off)
Code Rate	QPSK or BPSK 1/2, 3/4, and 7/8
Data Rate	4.8 to 4375 kbps
Data Inhibit	On or Off
Demodulation Type	INTL Open, CEFD Closed, or SDM-51
DEMIUX TRIB x Clock Phase	INV or NRM
DEMIUX TRIB x Data Rate	0.6 to 4000 kbps or Off
DEMIUX TRIB x Data Phase	INV or NRM
DEMIUX TRIB x Interface Type	RS-232/RS-422
DEMIUX TRIB x Output Map	1 to 8
Fail-Safe Coonfirmation	Carrier Lock or Time-Out
Fail-Safe Confirmation Time-Out	0 to 65535 seconds
LNB Power Mon. Low-Limit	0 to 500 mA
LNB Power Mon. High Limit	0 to 500 mA
RF Input Frequency	950.0 to 1550.0 MHz
Reed-Solomon Decoder	On/Off
Reed-Solomon Deinterleaver Depth	8 or 16
Sweep Range	1.0 to 1000 kHz
Sweep Reacquisition	0 to 99 seconds
Spectral Rotation	INV or NRM

Note: Requires use of Comtech EF Data modulator and PC software.

8.11 Integrated Demultiplexer Option

8.11.1 2/4 Channel Demux (SP/5231) (Sosoft)

Demultiplexer Type	Synchronous, symmetrical data rates on all tributaries
Number of Tributary Channels	2 or 4, automatic detection
Tributary Data Interface	RS-422 or RS-232, 25-pin D-sub
Tributary Data Rate: SP/5231 4-Channel Mode 2-Channel Mode Clock	 9.6 to 64.0 kbps, 32/129 of aggregate channel 9.6 to 128.0 kbps, 64/129 of aggregate channel 50% duty cycle ± 10%, phase locked to aggregate channel
Synchronization Indicator	TTL, on interface connector (1 = SYNC)
Mode Indicator	TTL, on interface connector (0 = 2 channel mode)

8.11.1.1 Tributary Data Output Connector (J4)

Connector type: Dual row (2 x 13), Female.

Tributary Data Output Connector		
Signal Function	**Name**	**Pin #**
Trib #1 Data inverting output (RS-422)	RXDaT1	1
Trib #1 Data non-inverting output (RS-422)	RXDbT1	2
Trib #1 Clock inverting output (RS-422)	RXCaT1	3
Trib #1 Clock non-inverting output (RS-422)	RXCbT1	4
Trib #2 Data inverting output (RS-422)	RXDaT2	11
Trib #2 Data non-inverting output (RS-422)	RXDbT2	12
Trib #2 Clock inverting output (RS-422)	RXCaT2	16
Trib #2 Clock non-inverting output (RS-422)	RXCbT2	17
Trib #3 Data inverting output (RS-422)	RXDaT3	18
Trib #3 Data non-inverting output (RS-422)	RXDbT3	19
Trib #3 Clock inverting output (RS-422)	RXCaT3	20
Trib #3 Clock non-inverting output (RS-422)	RXCbT3	21
Trib #4 Data inverting output (RS-422)	RXDaT4	22
Trib #4 Data non-inverting output (RS-422)	RXDbT4	23
Trib #4 Clock inverting output (RS-422)	RXCaT4	24
Trib #4 Clock non-inverting output (RS-422)	RXCbT4	25
Demux synchronization indicator (TTL, 1 = SYNC)	DMXSYNC	6
Demux mode indicator (TTL, 0 = 2 channel mode)	DMXMD	9
Ground GND	13, 26	
No Connects	5, 7, 8, 10, 14, 15	

8.11.1.2 Aggregate Data/Clock Input and Power Connector (J3)

Connector type: Dual row (2 x 5), Female.

Table 8-9. Aggregate Data/Clock Input and Power Connector (J3)

Aggregate Data Input and Power Connector		
Signal Function	**Name**	**Pin #**
Aggregate data input (inverted TTL)	/ADAT	1
Aggregate clock input (TTL)	ACLK	7
+5V power	VCC	9
Ground	GND	10
No connects		2, 3, 4, 5, 6, 8

8.12 8-Channel Demux (SP/5839) (Comtech EFData)

8.12.1 Specifications

Table 8-10. 8-Channel Demux Specifications

Aggregate Input:	
Type	Synchronous (clock/data).
Data/Clock Interface	TTL (inverted data). Data valid on rising edge of clock.
Data Rate	4001.3 kbps maximum, the aggregate data rate is the sum of all tributary data rates plus the multiplex overhead.
Clock	50% duty cycle, ± 10%.
Multiplex Technique	Data interleaved time division.
Overhead	1.3 kbps fixed per frame.
Tributary Outputs:	
Number of Channels	One to eight.
Data Rate	600 bits/second to 4000.0 kbps/second (configurable for each tributary in 100 bits/second increments). Notes: 1. RS-232 maximum data rate is 64.0 kbps. 2. The sum of all tributary data rates plus overhead cannot exceed the maximum aggregate data rate of 4001.3 kbps/second.
Type	Synchronous clock and data.
Data Interface	RS-422 or RS-232.
Clock	50% duty cycle, ± 10%, phase locked to aggregate clock input, 0.25 dB maximum jitter gain from aggregate clock input.
Lock Time	1 second maximum after demodulator Carrier Detect (CD).
Operational Bit Error Rate Performance	Will lock and maintain synchronization with BER ≥ 10^{-3}.
Input Power	5 VDC, ± 10%, 900 mA maximum.
Environmental:	
Operating Temperature	-20° to +60°C.
Storage Temperature	-55° to +125°C.
Humidity	Up to 95% non-condensing.

Table 8-10. 8-Channel Demux Specifications (Continued)

Interface Connectors: JP1 JP2 JP3 JP4	 +5 VDC power, aggregate data, I^2C communications to demodulator card. Output sync and mode signals. 26-pin header, for tributary interfaces 1 through 4. 26-pin header, for tributary interfaces 5 through 8.
Unit-to-Unit Delay Variation	< 10% of 1/tributary data rate for identically configured demultiplexers. (See Note.)
Breakout Panel (UB-54)	Optional 1 RU breakout panel converts interface to eight separate 15-pin 'D" tributary interfaces.

Note: This is in addition to the delay variation of the base unit.

8.12.2 Tributary Data Connector (J3)

Table 8-11. Tributary Data Connector (J3)

JP3 Pin #	Demux T1-4 Circuit	Description
1	RD422A_1	RS-422, RX DATA (-), TRIB1
2	RD422B_1	RS-422, RX DATB (+), TRIB1
3	RC422A_1	RS-422, RX CLKA (-), TRIB1
4	RC422B_1	RS-422, RX CLKB (+), TRIB1
5	RD232_1	RS-232, RECEIVE DATA, TRIB1
6	RC232_1	RS-232, RECEIVE CLOCK, TRIB1
7	RD422A_2	RS-422, RX DATA (-), TRIB2
8	RD422B_2	RS-422, RX DATB (+), TRIB2
9	RC422A_2	RS-422, RX CLKA (-), TRIB2
10	RC422B_2	RS-422, RX CLKB (+), TRIB2
11	RD232_2	RS-232, RECEIVE DATA, TRIB2
12	RC232_2	RS-232, RECEIVE CLOCK, TRIB2
13	RD422A_3	RS-422, RX DATA (-), TRIB3
14	RD422B_3	RS-422, RX DATB (+), TRIB3
15	RC422A_3	RS-422, RX CLKA (-), TRIB3
16	RC422B_3	RS-422, RX CLKB (+), TRIB3
17	RD232_3	RS-232, RECEIVE DATA, TRIB3
18	RC232_3	RS-232, RECEIVE CLOCK, TRIB3
19	RD422A_4	RS-422, RX DATA (-), TRIB4
20	RD422B_4	RS-422, RX DATB (+), TRIB4
21	RC422A_4	RS-422, RX CLKA (-), TRIB4
22	RC422B_4	RS-422, RX CLKB (+), TRIB4
23	RD232_4	RS-232, RECEIVE DATA, TRIB4
24	RC232_4	RS-232, RECEIVE CLOCK, TRIB4
25	GND	GROUND
26	GND	GROUND

8.12.3 Tributary Data Connector (J4)

Table 8-12. Tributary Data Connector (J4)

JP4 Pin #	Demux T5-8 Circuit	Description
1	RD422A_5	RS-422, RX DATA (-), TRIB5
2	RD422B_5	RS-422, RX DATB (+), TRIB5
3	RC422A_5	RS-422, RX CLKA (-), TRIB5
4	RC422B_5	RS-422, RX CLKB (+), TRIB5
5	RD232_5	RS-232, RECEIVE DATA, TRIB5
6	RC232_5	RS-232, RECEIVE CLOCK, TRIB5
7	RD422A_6	RS-422, RX DATA (-), TRIB6
8	RD422B_6	RS-422, RX DATB (+), TRIB6
9	RC422A_6	RS-422, RX CLKA (-), TRIB6
10	RC422B_6	RS-422, RX CLKB (+), TRIB6
11	RD232_6	RS-232, RECEIVE DATA ,TRIB6
12	RC232_6	RS-232, RECEIVE CLOCK, TRIB6
13	RD422A_7	RS-422, RX DATA (-), TRIB7
14	RD422B_7	RS-422, RX DATB (+), TRIB7
15	RC422A_7	RS-422, RX CLKA (-), TRIB7
16	RC422B_7	RS-422, RX CLKB (+), TRIB7
17	RD232_7	RS-232, RECEIVE DATA, TRIB7
18	RC232_7	RS-232, RECEIVE CLOCK, TRIB7
19	RD422A_8	RS-422, RX DATA (-), TRIB8
20	RD422B_8	RS-422, RX DATB (+), TRIB8
21	RC422A_8	RS-422, RX CLKA (-), TRIB8
22	RC422B_8	RS-422, RX CLKB (+), TRIB8
23	RD232_8	RS-232, RECEIVE DATA, TRIB8
24	RC232_8	RS-232, RECEIVE CLOCK, TRIB8
25	GND	GROUND
26	GND	GROUND

Note: Tributary data connectors are on Demux Board (PL5839).

8.12.4 Aggregate Data/Clock Input, Power Connector

Connector type: Dual row (2 x 5), Female.

Table 8-13. Aggregate Data/Clock Input, Power Connector

Aggregate Data/Clock Input, Power Connector		
Signal Function	**Name**	**Pin #**
Aggregate Data - Inverted	/ADAT	1
Barker Word Data Sequence	BARK	2
IIC Serial Control Data	SDA	3
Barker Word Sequence Timing Pulse	BARKNOT	4
IIC Serial Control Clock	SCL	5
Spare	BARK3	6
Aggregate Clock Non-Inverted	ACLK	7
+5 VDC	+5VDC	8
+5 VDC	+5VDC	9
Ground	GND	10

8.12.5 Mode and Sync Connector

Connector type: Dual row (2 x 13), Female.

Table 8-14. Mode and SYNC Connector (JP2)

Mode and Sync Connector JP2		
Signal Function	**Name**	**Pin #**
Demux synchronization indicator (TTL, 1 = SYNC)	DMXSYNC	6
Demux mode indicator	DMXMD	9
Ground GND	13, 26	
No Connects	1-5, 7, 8, 10-25	

8.12.6 Secondary Demodulator Interface Connector

Connector type: Dual row (2 x 5), Female.

Table 8-15. Secondary Demodulator Interfacve Connector

Secondary Demodulator Interface Connector		
Signal Function	**Name**	**Pin #**
Xilinx CCLK from Main Board	CCLK	1
Xilinx DOUT from Main Board	DOUT	2
Spare	DMSPR_1	3
Spare	DMSPR_2	4
No Connect	NC	5 to 9
Ground	GND	10

8.13 Reed-Solomon Option

8.13.1 Specification

Refer to Table 8-16 for Reed-Solomon specification.

Table 8-16. Reed-Solomon Specifications

Decoder Type	IESS 308 Polynomial
Deinterleaver Type	IESS 308 Block (modified)
Deinterleaver Depth	8 or 16
RS Code Words	225,205,10
Descrambler	Modified V.35 Self Synchronizing

Appendix A. Remote Control Operation

This appendix describes the remote control operation of the SDR-54A.

- Firmware number: FW/5445-1K
- Software version: 4.2.4

A.1 General

Remote controls and status information are transferred via an EIA-232 serial communications link.

Commands and data are transferred on the remote control communications link as US ASCII-encoded character strings.

The remote communications link is operated in a half-duplex mode.

Communications on the remote link are initiated by a remote controller or terminal. The modem never transmits data on the link unless it is commanded to do so.

A.2 Message Structure

The ASCII character format used requires 9600 bits/second, 11 bits/character:

- 1 start bit
- 7 information bits
- 1 parity bit (even)
- 2 stop bits

Messages on the remote link fall into the categories of commands and responses.

Commands are messages which are transmitted to a satellite modem, while responses are messages returned by a satellite modem in response to a command.

Note: All commands must be in uppercase.

The general message structure is as follows:

- Start Character
- Device Address
- Command/Response
- End of Message Character

A.2.1 Start Character

A single character precedes all messages transmitted on the remote link. This character flags the start of a message. This character is:

- "<" for commands
- ">" for responses

A.2.2 Device Address

The only valid address that will be recognized and accepted by the SDR-54A is 1.

A.2.3 Command/Response

The command/response portion of the message contains a variable-length character sequence which conveys command and response data.

If a satellite modem receives a message addressed to it which does not match the established protocol or cannot be implemented, a negative acknowledgment message is sent in response. This message is:

- >1/?ER2_invalid parameter'cr''lf']
  (Error message for a recognized command which cannot be implemented or has parameters which are out of range.)

- >1/?ER3_unrecognizable command'cr''lf']
  (Error message for unrecognizable command or bad command syntax.)

- >1/?ER5_hard coded parameter'cr''lf']
  (Error message indicating that the parameter is hardware dependent and may not be changed remotely.)

  Note: All commands must be in uppercase.

  Example: To enter a data rate of 64 kbit/s, type the following and press "ENTER":
  <1/DR_64

  The response should be:
  >1/DR_64

A.2.4 End Character

Each message is ended with a single character which signals the end of the message:

- "cr" Carriage return character for commands
- "]" End bracket for responses

A.3 Configuration Commands/Responses

The following commands are used to control and configure specific portions of the demodulator. Issuing these commands with no parameter will result in the current configuration being reported. Exceptions are noted in the individual command description.

A.3.1 Demodulator

Set Demodulator Frequency	Command: Response: Status: Response:	<1/DF_nnnn.nn'cr' >1/DF_nnnn.nn'cr''lf'] <1/DF_'cr' >1/DF_nnnn.nn'cr''lf']	Where: nnnn.nn = Frequency in MHz, 950.00 to 1550.00 in 10 kHz steps. Changes the current value of the demodulator frequency.
Set Demodulator Code Rate	Command: Response: Status: Response:	<1/CR_xxxx'cr' >1/CR_xxxx'cr''lf'] <1/CR_'cr' >1/CR_xxxx'cr''lf']	Where: xxxx = 1/2 (QPSK 1/2), 3/4 (QPSK 3/4), 7/8 (QPSK 7/8), or BP12 (BPSK 1/2). Changes the current value of the demodulator code rate. Note: If changing the code rate makes the current data rate invalid, then the data rate will be reset to 64.000 kbit/s.
Set Demodulator Data Rate	Command: Response: Status: Response:	<1/DR_nnnn.nnn'cr' >1/DR_nnnn.nnn'cr''lf'] <1/DR_'cr' >1/DR_nnnn.nnn'cr''lf']	Where: nnnn.nnn = Data rate in kbit/s (QPSK 1/2: 9.6 to 2500.0 kbit/s), (QPSK 3/4: 14.4 to 3750.0 kbit/s), (QPSK 7/8: 16.8 to 4375.0 kbit/s), or (BPSK 1/2: 4.8 to 1250.0 kbit/s). Changes the current value of demodulator data rate.
Set Demodulator Code & Data Rate Variable	Command: Response: Status: Response:	<1/SDRV_xxxx_nnnn.nnn'cr' >1/SDRV_xxxx_nnnn.nnn'cr''lf'] <1/SDRV_'cr' >1/SDRV_xxxx_nnnn.nnn'cr'lf']	Where: xxxx = 1/2 (QPSK 1/2), 3/4 (QPSK 3/4), 7/8 (QPSK 7/8), or BP12 (BPSK 1/2). nnnn.nnn = Data rate in kbit/s (QPSK 1/2: 9.6 to 2500.0 kbit/s), (QPSK 3/4: 14.4 to 3750.0 kbit/s), (QPSK 7/8: 16.8 to 4375.0 kbit/s), or (BPSK 1/2: 4.8 to 1250.0 kbit/s). Changes the current value of both the code and data rates.
Reset Sweep	Command: Response:	<1/RS_'cr' >1/RS_'cr''lf']	Resets the demodulator sweep to the starting frequency.
Set Sweep Reacquisi-tion Time	Command: Response: Status: Response:	<1/SR_xx'cr' >1/SR_xx'cr''lf'] <1/SR_'cr' >1/SR_xx'cr''lf']	Where: xx = 0 to 99 (number of seconds). Sets the time delay between losing lock and beginning a new sweep.
Sweep Width Range	Command: Response: Status: Response:	<1/SWR_nnnn'cr' >1/SWR_nnnn'cr''lf'] <1/SWR_'cr' >1/SWR_nnnn'cr''lf']	Where: nnnn = Frequency in kHz, 10 to 1000 in 10 kHz steps. Sets the range of the sweep. The specified range extends 50% above and below the sweep center frequency.

Receive AIS (Data Inhibit)	Command: Response: Status: Response:	<1/RAIS_xxx'cr' >1/RAIS_xxx'cr''lf'] <1/RAIS_'cr' >1/RAIS_xxx'cr''lf']	Where: xxx = ON (force all 1s) or OFF (normal data). Forces the output data to all ones.
Group Link Address	Command: Response: Status: Response:	<1/GA_xxx'cr' >1/GA_xxx'cr''lf'] <1/GA_'cr' >1/GA_xxx'cr''lf']	Where: xxx = 0 to 255. Sets the group link address. Note: A '0' indicates ignore all group and global link messages.
Local (Individual) Link Address	Command: Response: Status: Response:	<1/LA_xxxxx'cr' >1/LA_xxxxx'cr''lf'] <1/LA_'cr' >1/LA_xxxxx'cr''lf']	Where: xxxxx = 0 to 65535. Sets the local link address. Note: A '0' indicates ignore all local, group, and global link messages.
Demodulator Spectrum Rotation	Command: Response: Status: Response:	<1/DSR_xxx'cr' >1/DSR_xxx'cr''lf'] <1/DSR_'cr' >1/DSR_xxx'cr''lf']	Where: xxx = NRM (normal spectrum) or INV (inverted spectrum). Sets the spectrum rotation to either normal or inverted.
Set LNB Power Monitor Option Low Current Threshold	Command: Response: Status: Response:	<1/SPL_nnn'cr' >1/SPL_nnn'cr''lf'] <1/SPL_'cr' >1/SPL_nnn'cr''lf']	Where: nnn = 50 to 500 mA, in 50 mA steps. Sets the low current threshold for the LNB fault monitoring. Current draw less than this value will result in an error being reported in the demodulator faults. Note: The lower limit specified must be less than or equal to the current upper limit (LNB switch must be on).
Set LNB Power Monitor Option High Current Threshold	Command: Response: Status: Response:	<1/SPH_nnn'cr' >1/SPH_nnn'cr''lf'] <1/SPH_'cr' >1/SPH_nnn'cr''lf']	Where: nnn = 50 to 500 mA, in 50 mA steps. Sets the high current threshold for the LNB fault monitoring. Current draw exceeding this value will result in an error being reported in the demodulator faults. Notes: 1. The upper limit specified must be greater than or equal to the current lower limit. 2. LNB Switch (S3) must be ON.
Demodulator Type	Command: Response: Status: Response:	<1/DT_xxxxx'cr' >1/DT_xxxxx'cr''lf'] <1/DT_'cr' >1/DT_xxxxx'cr''lf']	Where: xxxxx = INTL (INTELSAT Open Network), EFD (EFData Closed Network), or SDM51 (SDM-51 compatible). The demodulator type species the filter to be applied to the received data.
Differential Decoder Enable	Command: Response: Status: Response:	<1/DDEC_xxx'cr' >1/DDEC_xxx'cr''lf'] <1/DDEC_'cr' >1/DDEC_xxx'cr''lf']	Where: xxx = OFF (Differential Decoder Disabled) or ON (Differential Decoder Enabled). Enables or disables the differential decoder section of the Viterbi decoder.
Descrambler Enable	Command: Response: Status: Response:	<1/DE_xxxx'cr' >1/DE_xxxx'cr''lf'] <1/DE_'cr' >1/DE_xxxx'cr''lf']	Where: xxxx = OFF (Descrambler Disabled) or ON (Descrambler Enable). Enables or disables the descrambler section of the Viterbi decoder.

Bit Error Rate Threshold	Command: Response: Status: Response:	<1/BERT_xxxx'cr' >1/BERT_xxxx'cr"lf'] <1/BERT_'cr' >1/BERT_xxxx'cr"lf']	Where: xxxx = NONE or $E1^{-n}$ (where n = 3, 4, 5, 6, 7, or 8 [exponent of threshold]). Sets the exponent for the fault reporting for of BER threshold. Entering NONE turns off BER testing.
Reed-Solomon Decoder Enable	Command: Response: Status: Response:	<1/RSDE_xxx'cr' >1/RSDE_xxx'cr"lf'] <1/RSDE_'cr' >1/RSDE_xxx'cr"lf']	Where: xxx = ON or OFF.
RX Reed-Solomon I Value	Command: Response: Status: Response:	<1/RRSI_xx'cr' >1/RRSI_xx'cr"lf'] <1/RRSI_'cr' >1/RRSI_xx'cr"lf']	Where: xx = 8 or 16.

A.4 Status Commands/Responses

Demodulator Status	Command: Response:	<1/DS_'cr' >1/DS_'cr' CD_xxx'cr' BERT_xxx'cr' SYN_xxx'cr' FPGA_xxx'cr' DSP_xxx'cr' LNB_xxx'cr' DMX_xxx'cr' RS_xxx'cr"lf']	Carrier Detect (OK/FLT) BER Threshold (OK/FLT) RF Lock Detect (OK/FLT) FPGA Load Error (OK/FLT) DSP Communications (OK/FLT) LNB Power (OK/FLT/OFF) Demux Fault (OK/FLT/OFF) Reed-Solomon (OK/FLT/OFF) This status command queries the fault detection section of the demodulator. Errors for the sections indicated below are reported.
E_b/N_0 Status	Command: Response:	<1/EBN0_'cr' >1/EBN0_xnn.ndB'cr"lf']	Where: x = < or > (data modifier to indicate that the E_b/N_0 is less than or greater than the returned value). nn.n = 1.0 to 99.9 in dB (E_b/N_0 value). Reports current E_b/N_0 status. Notes: 1. The 'x' (< or >) parameter is only returned if the E_b/N_0 has exceeded the computational resolution of the system. 2. 'No Data' is returned if the E_b/N_0 cannot be calculated. 3. 'Sampling' is returned if not enough data is currently available to calculate the E_b/N_0.
Receive Signal Level Status	Command: Response:	<1/RSL_'cr' >1/RSL_xsnndBm'cr"lf']	Where: x = < or > (data modifier to indicate that the receive signal level is less than or greater than the returned value). s = + or - (receive signal level sign, ±). nn = 20 to 90 in dBm (receive signal level magnitude). Reports the amplitude of the received signal. Notes: 1. The 'x' (< or >) parameter is only returned if the level has exceeded the computational resolution of the system. 2. 'No Data' is returned if the level cannot be calculated. 3. 'Sampling' is returned if not enough data is currently available to calculate the level.
LNB Current Monitor Status	Command: Response:	<1/CMS_'cr' >1/CMS_nnn'cr"lf']	Where: nnn = 0 to 500, or 'OVR'. Reports the current draw of the LNB. The system is capable of accurately measuring current levels up to 500 mA. Levels above 500 mA will be reported as 'OVR'.
Current Sweep Value	Command: Response:	<1/CSV_'cr' >1/CSV_snnnnnn'cr"lf']	Where: s = + or - (Sweep offset from center). nnnnnn = 0 to 500000 Hz. This command returns the current sweep value.

Equipment Type	Command: Response:	<1/ET_'cr' >1/ET_SDR54A_tttttttt_xxx.yyy.zzz'cr''lf']	Where: tttttttt = Equipment type. xxx.yyy.zzz = Software version. Equipment type specifies the unit and current firmware versions.
Firmware Information	Command: Response:	<1/FI_'cr' >1/FI_'cr' VER_xxx.yyy.zzz'cr' MC_FW/nnnnnn-ddr'cr' MC_mm/dd/yy'cr' FPGA_FW/nnnnnn-ddr'cr' FPGA_mm/dd/yy'cr' DSP_FW/nnnnnn-ddr'cr' DSP_mm/dd/yy'cr''lf']	Where: xxx.yyy.zzz = Software version number (0.0.0 to 999.999.999). nnnnnn = Firmware number (0 to 999999). dd = Firmware dash number (0 to 99). r = Firmware revision (-, or A to Z).
Raw BER Status	Command: Response:	<1/RBER_'cr' >1/RBER_xm.mE-ee'cr''lf']	Where: x = < or > (data modifier to indicate that the E_b/N_0 is less than or greater than the returned value). m.m = 1.0 to 9.9 (error rate mantissa). ee = 1 to 99 (error rate exponent). Reports current measurement of the raw BER. Notes: 1. The 'x' parameter is only returned if the error rate has exceeded the computational resolution of the system. 2. 'No Data' is returned if the error rate cannot be calculated. 3. 'Sampling' is returned if not enough data is currently available to calculate the error rate.
Corrected BER	Command: Response:	<1/CBER_'cr' >1/CBER_xm.mE-ee'cr''lf']	Where: x = < or > (data modifier to indicate that the E_b/N_0 is less than or greater than the returned value). m.m = 1.0 to 9.9 (error rate mantissa). ee = 1 to 99 (error rate exponent). Reports current measurement of the corrected BER. Notes: 1. The 'x' parameter is only returned if the error rate has exceeded the computational resolution of the system. 2. 'No Data' is returned if the error rate cannot be calculated. 3. 'Sampling' is returned if not enough data is currently available to calculate the error rate.

Demodulator Config Status	Command: Response:	<1/DCS_'cr' >1/DCS_'cr' DF_nnnn.nn'cr' DR_nnnn.nnn'cr' CR_xxxx'cr' SR_xx'cr' SWR_nnnnnnn'cr' DDEC_'cr' DE_'cr' BERT_'cr' DT_xxxx'cr' RAIS_xxx'cr' GA_xxx'cr' LA_xxxxx'cr' DSR_xxxx'cr' SPL_nnn'cr' SPH_nnn'cr' RSDE_xxx'cr' RRSI_'xx'cr''lf']	 Demodulator Frequency Demodulator Data Rate Demodulator Code Rate Sweep Reacquisition Time Sweep Width Range Differential Decoder Enable Descrambler Enable BER Threshold Demodulator Type Data Inhibit Group Link Address Local Link Address Demodulator Spectrum Rotation LNB Power Low Current Threshold LNB Power High Current Threshold Reed-Solomon Decoder Enable RX Reed-Solomon I Value This command gives a status of each of the systems configured by the commands covered in Section B.4 of this remote document.
Modem Options/ Misc Information	Command: Response:	<1/MOI_'cr' >1/MOI_'cr' s,SR'cr' s,LRV'cr' s,FRV'cr' s,CARD_1_PCB'cr' s,CARD_2_PCB'cr''lf']	 (- or +) Single Code/data Rate (- or +) Low Rate Variable (- or +) Full Rate Variable (x or +) Card #1 (DEMUX) Installed (x or +) Card #2 (RS) Installed Where: s = 0 (Not Installed or Upgraded), - (Not Installed, FAST Upgradable), + (Installed). Or X (Not Installed, Field Upgradable).
Card #1 Type Information	Command: Response:	<1/C1TI_'cr' >1/C1TI_'cr'ttttt'cr''lf']	Where: ttttt = type (DEMUX_01, or Not _Installed).
Card #2 Type Information	Command: Response:	<1/C2TI_'cr' >1/C2TI_'cr'ttttt'cr''lf'] (Reed-Solomon)	Where: ttttt = type (RS_03 or NOT_INSTALLED)
Card #1 Options/ Misc Information	Command: Response:	<1/C1OI_'cr' >1/C1OI_'cr''lf'] DEMUX_01 List: s,4_CHAN'cr' s,8_CHAN'cr'	Where: s = 0 (Not_Installed) or + (Installed). Note: Card #1 installed only.
Card #2 Options/ Misc Information	Command: Response:	<1/C2OI_'cr' <1/C2OI_'cr''lf'] (Reed-Solomon)	Where: s = - (Not Installed, FAST Upgradeable) or + (Installed). RS_03 list: s, INTELSAT'cr''lf'] (- or +). Note: Card #2 installed only.
Serial Number	Command: Response:	<1/SNUM_'cr' >1/SNUM_'cr' MODEM xxxxxxxxx'cr''lf'] CARD_1_xxxxxxxxx'cr''lf'] (Note 1) CARD_2_xxxxxxxxx'cr''lf'] (Note 2)	Where: xxxxxxxxx = Serial number 000000000 to 999999999. Notes: 1. Data is returned only if Card #1 is installed. 2. Data is returned only if Card #2 is installed.

A.5 DEMUX Commands/Responses

DEMUX Tributary Data Rate & Enable	Command: Response: Status: Response:	<1/DTDR_x_yyyyyy'cr' >1/DTDR_x_yyyyyy'cr"lf'] <1/DTDR_x_'cr' >1/DTDR_x_yyyyyy'cr"lf']	Where: x = 1 to 8 (Tributary number). yyyyyy = Off (Disabled), 0.6 to 4000.0 kbit/s for RS422, in 100 bit/s steps, or 0.6 to 64.0 kbit/s for RS232, in 100 bit/s steps.
DEMUX Tributary Interface Type	Command: Response: Status: Response:	<1/DTIT_x_yyyyy'cr' >1/DTIT_x_yyyyy'cr"lf'] <1/DTIT_x_'cr' >1/DTIT_x_yyyyy'cr"lf']	Where: x = 1 to 8 (Tributary number). yyyyy = RS422 or RS232.
DEMUX Tributary Output Map	Command: Response: Status: Response:	<1/DTOP_n_m'cr' >1/DTOP_n_m'cr"lf'] <1/DTOP_n'cr' >1/DTOP_n_m'cr"lf']	Where: n = Tributary number (1 to 8). m = Output number (1 to 8).
DEMUX Tributary Clock Phase	Command: Response: Status: Response:	<1/DTCP_x_yyy'cr' >1/DTCP_x_yyy'cr"lf'] <1/DTCP_x_'cr' >1/DTCP_x_yyy'cr"lf']	Where: x = 1 to 8 (Tributary number). yyy = NRM (Normal Clock Phasing) or INV (Inverted Clock Phasing).
DEMUX Tributary Data Phase	Command: Response: Status: Response:	<1/DTDP_x_yyy'cr' >1/DTDP_x_yyy'cr"lf'] <1/DTDP_x_'cr' >1/DTDP_x_yyy'cr"lf']	Where: x = 1 to 8 (Tributary number). yyy = NRM (Normal Data Phasing) or INV (Inverted Data Phasing).

A.6 Interface Configuration Status

	Command: Response:	<1/ICS_'cr' >1/ICS_'cr'	
		DTDR_1_yyyyyy'cr'	DEMUX Tributary #1
		DTIT_1_yyyyy'cr'	DEMUX Tributary #1
		DTOP_1_m'cr'	DEMUX Tributary #1
		DTCP_1_yyy'cr'	DEMUX Tributary #1
		DTDP_1_yyy'cr'	DEMUX Tributary #1
		DTDR_2_yyyyyy'cr'	DEMUX Tributary #2
		DTIT_2_yyyyy'cr'	DEMUX Tributary #2
		DTOP_2_m'cr'	DEMUX Tributary #2
		DTCP_2_yyy'cr'	DEMUX Tributary #2
		DTDP_2_yyy'cr'	DEMUX Tributary #2
		DTDR_3_yyyyyy'cr'	DEMUX Tributary #3
		DTIT_3_yyyyy'cr'	DEMUX Tributary #3
		DTOP_3_m'cr'	DEMUX Tributary #3
		DTCP_3_yyy'cr'	DEMUX Tributary #3
		DTDP_3_yyy'cr'	DEMUX Tributary #3
		DTDR_4_yyyyyy'cr'	DEMUX Tributary #4
		DTIT_4_yyyyy'cr'	DEMUX Tributary #4
		DTCP_4_yyy'cr'	DEMUX Tributary #4
		DTOP_4_m'cr'	DEMUX Tributary #4
		DTDP_4_yyy'cr'	DEMUX Tributary #4
		DTDR_5_yyyyyy'cr'	DEMUX Tributary #5
		DTIT_5_yyyyy'cr'	DEMUX Tributary #5
		DTOP_5_m'cr'	DEMUX Tributary #5
		DTCP_5_yyy'cr'	DEMUX Tributary #5
		DTDP_5_yyy'cr'	DEMUX Tributary #5
		DTDR_6_yyyyyy'cr'	DEMUX Tributary #6
		DTIT_6_yyyyy'cr'	DEMUX Tributary #6
		DTOP_6_m'cr'	DEMUX Tributary #6
		DTCP_6_yyy'cr'	DEMUX Tributary #6
		DTDP_6_yyy'cr'	DEMUX Tributary #6
		DTDR_7_yyyyyy'cr'	DEMUX Tributary #7
		DTIT_7_yyyyy'cr'	DEMUX Tributary #7
		DTOP_7_m'cr'	DEMUX Tributary #7
		DTCP_7_yyy'cr'	DEMUX Tributary #7
		DTDP_7_yyy'cr'	DEMUX Tributary #7
		DTDR_8_yyyyyy'cr'	DEMUX Tributary #8
		DTIT_8_yyyyy'cr'	DEMUX Tributary #8
		DTOP_8_m'cr'	DEMUX Tributary #8
		DTCP_8_yyy'cr'	DEMUX Tributary #8
		DTDP_8_yyy'cr"lf']	
			Note: See Section B.5 for detailed description of these responses.

Notes:

Glossary

The following is a list of acronyms and abbreviations that may be found in this manual.

Acronym/ Abbreviation	Definition
Ω	Ohms
AC	Alternating Current
AGC	Automatic Gain Control
AIS	Alarm Indication Signal
ASCII	American Standard Code for Information Interchange
ASYNC	Asynchronous
BER	Bit Error Rate
bit/s	Bits per second
BPSK	Bi-Phase Shift Keying
C	Celsius
CCITT	International Telephone and Telegraph Consultative Committee
CEFD	Comtech EF Data
CLK	Clock
cr	Carriage Return
CTS	Clear to Send
DC	Direct Current
DAMA	Demand Assignment Multiple Access
dB	Decibels
dBm	Decibels referred to 1.0 milliwatt
DCE	Data Circuit Terminating Equipment
Demod	Demodulator
DEMUX	Demultiplexer
DSP	Digital Signal Processing
E_b/N_0	Bit Energy-to-Noise Ratio
ESD	Electrostatic Discharge
FAST	Fully Accessible System Topology
FM	Frequency Modulation
FPGA	Field Programmable Gate Array
FW	Firmware

Acronym/ Abbreviation	Definition
GHz	Gigahertz (10^9 hertz)
GND	Ground
Hz	Hertz (cycle per second)
IESS	INTELSAT Earth Station Standards
IF	Intermediate Frequency
INV	Inverted
k	Kilo (10^3)
kbit/s	Kilobits per second (10^3 bits per second)
kHz	Kilohertz (10^3 Hertz)
ks/s	Kilosymbols Per Second (10^3 symbols per second)
LED	Light-Emitting Diode
lf	Line Feed
LNB	Low Noise Block Converter
LO	Local Oscillator
m	Milli (10^{-3})
M&C	Monitor and Control
mA	Milliamperes
Max	Maximum
M&C	Monitor and Control
MHz	Megahertz (10^6 Hertz)
Min	Minimum or Minute
Mod	Modulator
ms	Millisecond (10^{-3} second)
Ms/s	Megasymbols per second
NRM	Normal
OQPSK	Offset Quadrature Phase Shift Keying
PCB	Printed Circuit Board
RF	Radio Frequency
RMA	Return Material Authorization
RTS	Request to Send
RX	Receive (Receiver)
S/N	Signal-to-Noise Ratio
SIG	Signal
SHLD	Shield
SLRC	Space Link Remote Control
SYNC	Synchronize
TRIB	Tributary
TTL	Transistor-Transistor Logic
TX	Transmit (Transmitter)
TXCLK	Transmit Clock
US	United States
VAC	Volts, Alternating Current
VDC	Volts, Direct Current
VSWR	Voltage Standing Wave Ratio
W	Watt

Index

8-Channel Demux (SP/5839)
(Comtech EF Data), 8-14
24 VDC Option, 3-7
48 VDC Option, 3-7
AC Option, 3-6
Adjacent Channel Interface Performance, 8-4
Aggregate Data/Clock Input,
Power Connector, 8-17
BER Performance, 6-7
BPSK and QPSK BER Performance
with Noise, 8-5
Carrier and Clock Acquisition Time, 8-7
Command/Response, A-3
Composite to Desired Input Power, 8-3
Configuration Commands/Responses, A-4
Configuration Setup, 4-2
Cooling Fan, 4-3
Correlator, 6-6
Data Out Connector (J4), 3-5
Data Out Connector (J4) Pinout Jumper
Location, 3-5
Data Out Connector (J4) Interface Type
Jumpers, 3-4
Deinterleaver, 6-3
Demodulator Functions,1-1
Demodulator and FEC Decoding Types, 8-5
Descrambler, 6-2
Description, 5-2
Desired Carrier Input Power, 8-3
DEMUX Commands/Responses, A-10
DEMUX Overview, 5-1
DEMUX 2/4-Channel (Optional), 5-2
DEMUX 8-Channel (Optional), 5-6
DEMUX 2/4-Channel Specification, 5-5
DEMUX 8-Channel Specification, 5-10
Device Address, A-2
Digital Data Rates, 8-4
End Character, A-3
Error Detection, 6-6
External Connectors, 3-1
FAST Accessible Options, 7-1
FAST System Theory, 7-1
Fault Connector (J2), 3-3
Fault Monitored, 8-11
Frequency Stability, 8-4
Front Panel, 4-1
Front Panel Connector Pinout, 3-4
Fully Accessible System Topology, 7-1
Functionality, 6-6
General, A-1
Ground, 3-7
IF Input Shape, 8-3
Implementation, 7-2
Indicators, 4-2
Installation, 2-1, 5-5, 5-7
Integrated Demultiplexer Option, 8-13
Interface Configuration Status, A-11
Interface Connector, 6-9, 8-19
Introduction, 1-1, 6-1
LNB Power, 4-2
M&C Communications, 8-10
M&C Interface Connector(s), 8-10
M&C Interface Configuration, 8-10
M&C Message Format, 8-10

M&C Port (J3), 3-3
Message Structure, A-1
Mode and SYNC Connector, 8-17
Monitor Signals, 8-10
Monitor and Control Specifications, 8-9
New in this Revision, 1-6
Operation, 4-1
Options, 1-5
Overview, 1-2
Power Entry, 3-6
Prime Power Interface, 7-3
QPSK and BPSK Performance with Noise and Reed-Solomon, 8-5
Rear Panel Connector Pinout, 3-3
Receive Data Clock Frequency Error, 8-7
Receive IF Carrier Acquisition Range, 8-7
Reed-Solomon, 6-1
Reed-Solomon Codec, 6-4
Reed-Solomon Installation, 6-4
Reed-Solomon Option, 8-18
Remote Control Operation, A-1
RF Input (J1), 3-2
RS-232, 2/4-Channel Demultiplexer Option (J4), 5-6
Secondary Demodulator Interface Connector, 8-17
Signal Level for Antenna Pointing, 8-8
Space Link Remote Control (SLRC) Specifications, 8-12
Specification, 6-8, 8-1, 8-14, 8-18
Start Character, A-2
Status Commands/Responses, A-7
System Installation, 2-2
System Status, 8-11
Tributary Data Connector (J3), 8-15
Tributary Data Connector (J4), 8-16
Tributary Data Interface Connector (J-4), 5-5
Tributary Data Interface Connector RS-422 (J5/J6), 5-11
Unit-to-Unit Dalay Variations, 8-8
Unpacking, 2-1

METRIC CONVERSIONS

Units of Length

Unit	Centimeter	Inch	Foot	Yard	Mile	Meter	Kilometer	Millimeter
1 centimeter	—	0.3937	0.03281	0.01094	6.214×10^{-6}	0.01	—	—
1 inch	2.540	—	0.08333	0.2778	1.578×10^{-5}	0.254	—	25.4
1 foot	30.480	12.0	—	0.3333	1.893×10^{-4}	0.3048	—	—
1 yard	91.44	36.0	3.0	—	5.679×10^{-4}	0.9144	—	—
1 meter	100.0	39.37	3.281	1.094	6.214×10^{-4}	—	—	—
1 mile	1.609×10^{5}	6.336×10^{4}	5.280×10^{3}	1.760×10^{3}	—	1.609×10^{3}	1.609	—
1 mm	—	0.03937	—	—	—	—	—	—
1 kilometer	—	—	—	—	0.621	—	—	—

Temperature Conversions

Unit	° Fahrenheit	° Centigrade
32° Fahrenheit	—	0 (water freezes)
212° Fahrenheit	—	100 (water boils)
-459.6° Fahrenheit	—	273.1 (absolute 0)

Formulas
C = (F - 32) * 0.555
F = (C * 1.8) + 32

Units of Weight

Unit	Gram	Ounce Avoirdupois	Ounce Troy	Pound Avoir.	Pound Troy	Kilogram
1 gram	—	0.03527	0.03215	0.002205	0.002679	0.001
1 oz. avoir.	28.35	—	0.9115	0.0625	0.07595	0.02835
1 oz. troy	31.10	1.097	—	0.06857	0.08333	0.03110
1 lb. avoir.	453.6	16.0	14.58	—	1.215	0.4536
1 lb. Troy	373.2	13.17	12.0	0.8229	—	0.3732
1 kilogram	1.0×10^{3}	35.27	32.15	2.205	2.679	—

2114 WEST 7TH STREET TEMPE ARIZONA 85281 USA
480 • 333 • 2200 PHONE
480 • 333 • 2161 FAX