Software Release Notification

DMD2050/DMD2050E Modem Release AL (4.8)

Applicability
Bulk release FW/5280AL (4.8), includes bulk firmware and SNMP MIB.

Revision History			
Rev #	**Description**	**Date**	**Prepared by**
Y	3.5 Initial support for Carrier-in-Carrier (NOTE: Last known F05280 release was U. Release X was being prepared by previous team but never released)	08/05/2009	Kent Myers
AA	3.7 Finalized implementation for Carrier-in-Carrier (note: 3.6 not used to skip "Z")	02/11/2010	Kent Myers
AB	3.8 Upgraded Carrier-in-Carrier and LDPC firmware	04/05/2010	Kent Myers
AC	3.9 Further enhanced Carrier-in-Carrier and LDPC firmware. Also added support for CnC relay bypass card.	04/28/2010	Kent Myers
AD	4.0 New release of Carrier-in-Carrier FPGA load to support latest CnC boards on the DMD2050.	10/01/10	Kent Myers
AE	4.1Improved EbNo monitor display and support Comtech Ethernet Format and PL0000735 baseband card.	02/17/2011	Kent Myers
AF	4.2 Fix CnC PLL lock detection. Added CnC 1 for 1 switch redundancy mode. New CnC Fpga bin file load.	08/03/2011	Kent Myers
AG	4.3 Pre-ITA test release.	10/03/2012	Kent Myers
AH	4.4 EBEM interface including ITA support.	11/06/2012	Kent Myers
AJ	4.6 Extended lower TPC/LDPC rates. CIDR IP addressing. DMD2050E feature options.	02/11/2013	Kent Myers
AK	4.7 Corrected problems with Load Configuration File. Corrected problems with EBEM: Encryption at high data rates, Loop Timing, 16APSK 4096k and changed EBEM Turbo 1/2 to Turbo 21/44. EBEM TX LSYNC value for QPSK 1024k to 4096k.	07/03/2012	Kent Myers
AL	4.8 (New Features) Extended data rates for EBEM configurations, Block mode TRANSEC for TPC and LDPC configurations, Closed Network AHO, Transmit DSSS, Transmit ULL LDPC implementation, Extended RSL monitor, CnC Gain calibration. Bug fixes	Per PLM	Michael Kubicki

Copyright © Comtech EFData, 2006-2019
All rights reserved.
Printed in the USA.

Table of Contents

1 INTRODUCTION 4

2 HARDWARE 4

2.1 DMD2050 Configuration 4

2.2 DMD2050E and DMD2050E/U Configuration 5

3 NEW FEATURES 6

3.1 Extended Data Rate 6

3.2 Block Mode Transmission Security (TRANSEC) Encryption for Turbo Product Codes (TPC) and Low Density Parity Check (LDPC) Forward Error Correction (FEC) 9

3.3 Closed Network Antenna Handover (AHO) 12

3.3.1 Configuration 12

3.3.2 DMD2050 MIL-188-114A (J19) 13

3.3.3 DMD2050 ALARM (J15) 14

3.3.4 DMD2050E Modem Setup 14

3.4 Transmit Direct Sequence Spread Spectrum (DSSS) 15

3.5 Transmit Ultra Low Latency (ULL) Low Density Parity Check (LDPC) 18

3.6 Receive Signal Level Monitor Extension 19

3.7 Unit specific Carrier-In-Carrier™ Gain Adjustment and override or calibration 19

4 BUG FIXES 20

4.1 Web Browser 20

4.2 Real Time Clock 20

4.3 Terminal Scrolling 20

4.4 V.35Scrambler data polarity 20

4.5 Efficient Drop and Insert 21

4.6 RX Input Level Threshold Alarm Functionality 21

5 MNC ALTERATIONS 21

5.1 FIPS Block Mode 21

5.2 Ultra Low Latency LDPC **21**

5.3 Generic support for transmit DSSS spread spectrum **21**

5.4 General Changes **22**

5.5 Updates to General Modem **24**

5.5.1 New ADT's 24

5.6 Non Volatile Memory Changes **24**

5.7 MIB Updates **24**

6 KNOWN ISSUE(S) IN THIS RELEASE **24**

1 Introduction

This release package contains features and bug fixes targeted to the DMD2050, DMD2050E and DMD2050E/U Military satellite modem bulk software, including signal processing of field programmable gate array (FPGA) code.

2 Hardware

The DMD2050 family hardware configuration is based on three circuit card assemblies (minimum configuration) design with additional optioned circuit cards assemblies available for additional features. The minimum configuration consists of an L-Band/IF Assembly and a Digital Baseband Assembly along with the user front panel. The optional printed circuit cards include one of several types of Interface circuit cards, a Carrier-In-Carrier Interposing circuit card, and one of several Codec expansion circuit cards certain Codec Expansion Cards are also capable of attaching a FIPs module to perform transmission security (TRANSEC) on certain forward error correction schemes. A block diagram of the DMD2050 is shown in Figure 1.

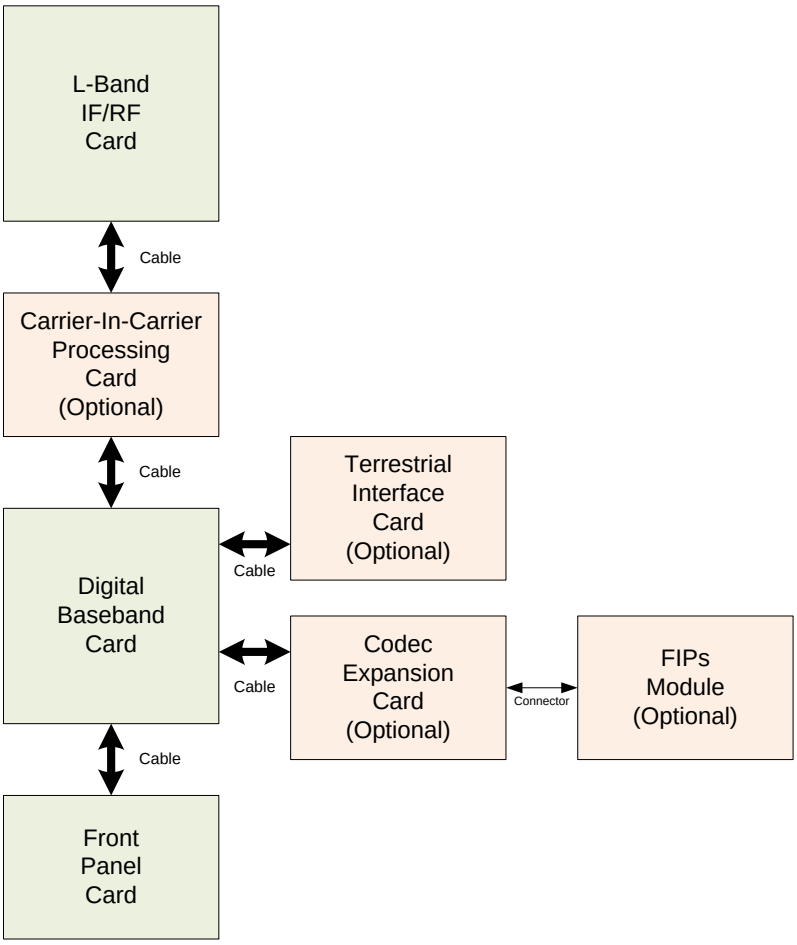

Figure 1 - DMD2050 Block Diagram

2.1 DMD2050 Configuration

Table 1 – DMD2050 Hardware Configurations

Part Number	Description	Revision
	DMD2050 Digital Baseband CCA	
AS/5224	Digital Baseband Card	Rev A or above
PL-0000735	Digital Baseband Card	Any
	DMD2050 L-Band IF/RF CCA	
AS/5227	L-Band IF/RF Card	Rev C or above
PL-0000734	L-Band IF/RF Card	Any
	DMD2050 Front Panel CCA	
AS/4385	Front Panel Assembly	Any
	DMD2050 Family Terrestrial Interface CCA	
AS/4975	G.703 IDR Card	Any
AS/5079	HSSI Card	Any
AS/5076	ASI / LVDS	Any
AS/5171	10/100 Ethernet	Any
AS/5477	G.703 IDR Card	Any
AS/5497	10/100 Ethernet	Any
ASR5660	G.703 T3/E3 IDR Card	Any
ASR5710	Eurocom Base Card	Any
ASR5711	Eurocom Daughter Card	Any
PL5584	10/100/1000 Ethernet	Any
	DMD2050 Family Codec Expansion CCA	
AS/5111	Turbo Card with RS	Any
AS/5051	Turbo Card	Any
As/5167	Super Card	Any
PLR6002	LDPC Card	Rev C or above
PL20958	TPC/LDPC Card w/FIPs Header	Any
	DMD2050 CnC™ Interposer CCA	
PL-00673	DMD CnC Card	Rev C or above
	Comtech EF Data FIPs Module	
PL-0000192	FIPs 140-2 Module	Any

2.2 DMD2050E and DMD2050E/U Configuration

Table 2 – DMD2050E Hardware Configurations

Part Number	Description	Revision
	DMD2050 Digital Baseband CCA	
AS/5224	Digital Baseband Card	Rev A6 or above
PL-0000735	Digital Baseband Card	Any
	DMD2050 L-Band IF/RF CCA	
AS/5227*	**L-Band IF/RF Card**	**Rev C or above**
PL-0000734	L-Band IF/RF Card	Any
	DMD2050 Front Panel CCA	

AS/4385	Front Panel Assembly	Any
	DMD2050 Family Terrestrial Interface CCA	
PL5584-HSSI	10/100/1000 Ethernet with HSSI Expansion	Any
	DMD2050 Family Codec Expansion CCA	
PL20173	EBEM TPC/LDPC Card w/FIPs Header	Any
	DMD2050 CnC Interposer CCA	
PL-00673	DMD CnC Card	Rev C or above
	Comtech EF Data FIPs Module	
PL-0000192	FIPs 140-2 Module	Any

*A DMD2050E with this AS/5227 RF Card is an upgraded DMD2050 and is considered a DMD2050E/U

3 New Features

3.1 Extended Data Rate

The arbitrary data rate limit restriction on the 10/100/1000 Ethernet data interface of a DMD2050 family of modems when running in the EBEM Network spec was removed and now the unit will be capped by 30 MSPS (114MBPS). This change affects the DMD2050 modems with the PL-20173 “EBEM” codec or DMD2050E and DMD2050E/U units. This change allows Ethernet only, Figure 2 or mixed mode operation, Figure 3up 30 MSPS at any modulation and code rate. This is operational with or without EBEM counter mode encryption enabled, and is a valid configuration for operation of Comtech EF Data’s DoubleTalk® Carrier-In-Carrier™.

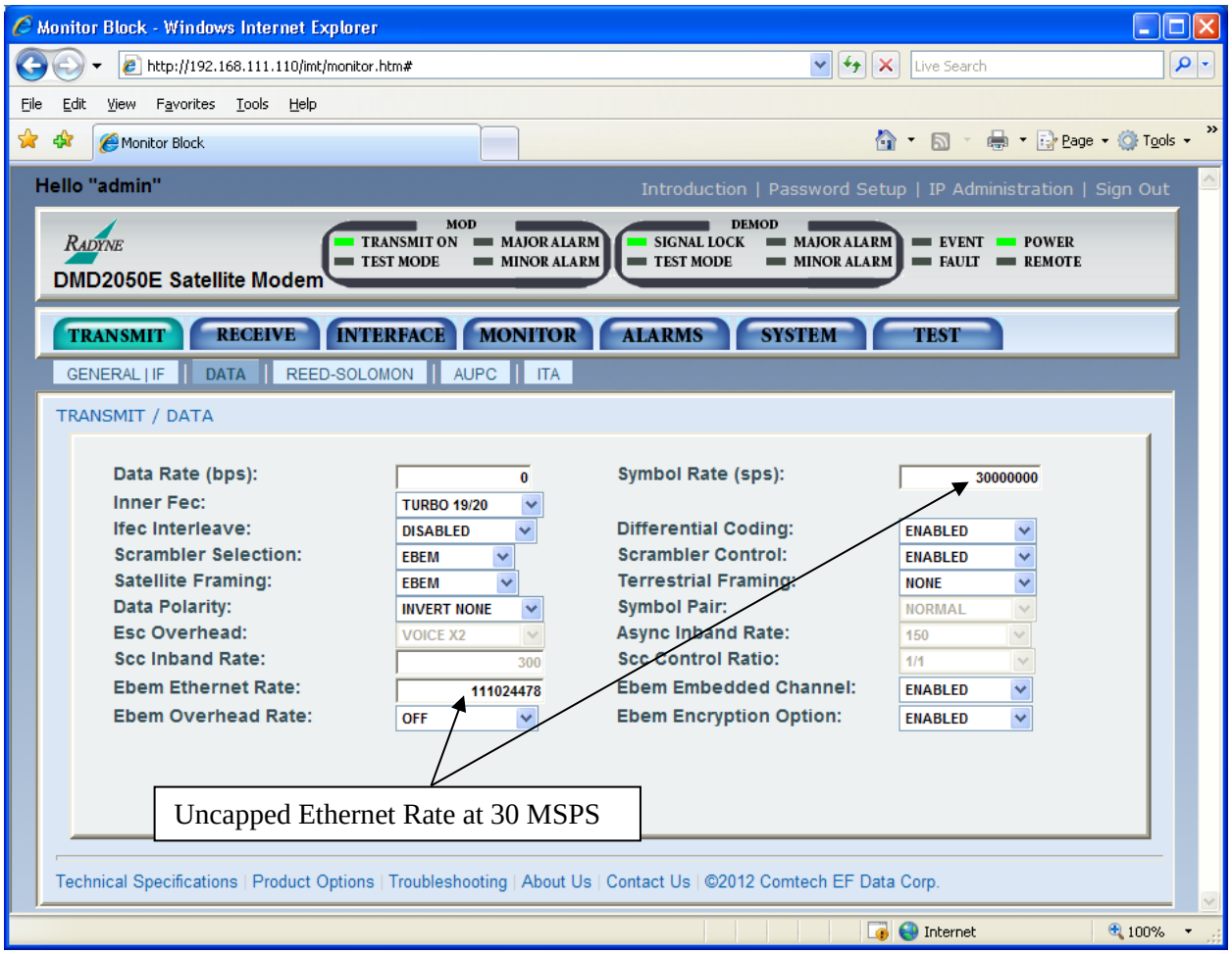

Figure 2 - DMD2050 EBEM Ethernet only Data Rate Extension

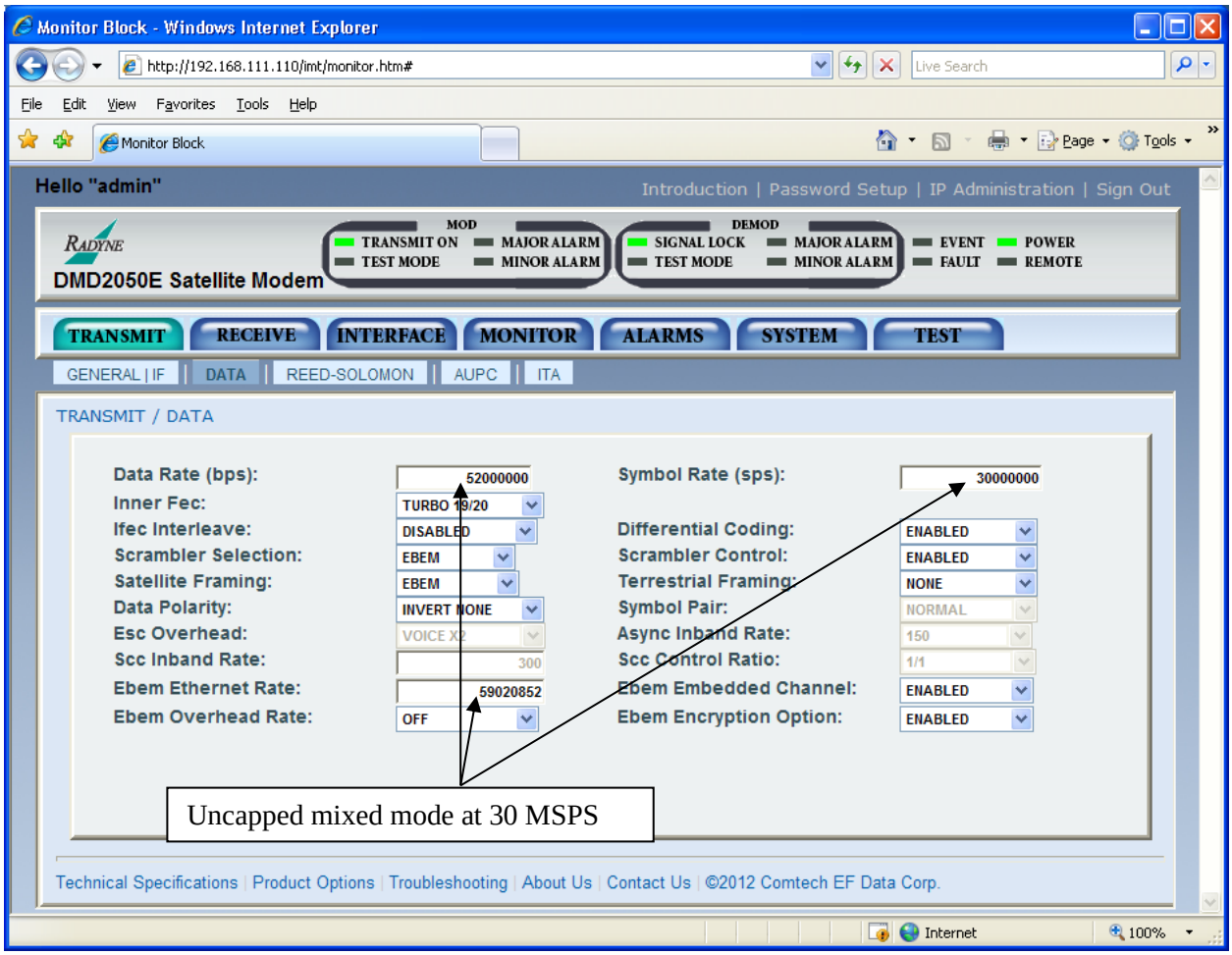

Figure 3- DMD2050 EBEM Mixed Mode Data Rate Extension

3.2 Block Mode Transmission Security (TRANSEC) Encryption for Turbo Product Codes (TPC) and Low Density Parity Check (LDPC) Forward Error Correction (FEC)

The DMD2050 family when running a TPC or LDPC forward error correction using an a codec expansion card with the FIPs TRANSEC module attached can now be configured and interoperate with Comtech EF Data's block mode encryption in any frame size from 1 through 16with any modulation and code rate shown in Table 3.

Table 3 –Block Mode TRANSEC Encryption Modulations and Code Rates

Modulation	Block Mode Encryption Code Rates			
BPSK TPC	TPC 5/16	TPC 21/44		
BPSK LDPC	LDPC 1/2			
(O)QPSK TPC		TPC 21/44	TPC 3/4	TPC 7/8
(O)QPSK LDPC	LDPC 1/2	LDPC 2/3	LDPC 3/4	
8PSK TPC			TPC 3/4	TPC 7/8
8PSK LDPC		LDPC 2/3	LDPC 3/4	
8QAM TPC			TPC 3/4	TPC 7/8
8QAM LDPC		LDPC 2/3	LDPC 3/4	
16QAM TPC			TPC 3/4	TPC 7/8
16QAM LDPC			LDPC 3/4	

Comtech EF Data Block mode TRANSEC Encryption Frame lengths are user specified and configured in the TRANSEC module interface the bandwidth expansion factor for a frame size is defined as:

$$TRANSEC\ Block\ Mode\ Bandwidth\ Expansion = \frac{[3 + (16 * N)]}{(16 * N)}, N = 1 \ldots 16$$

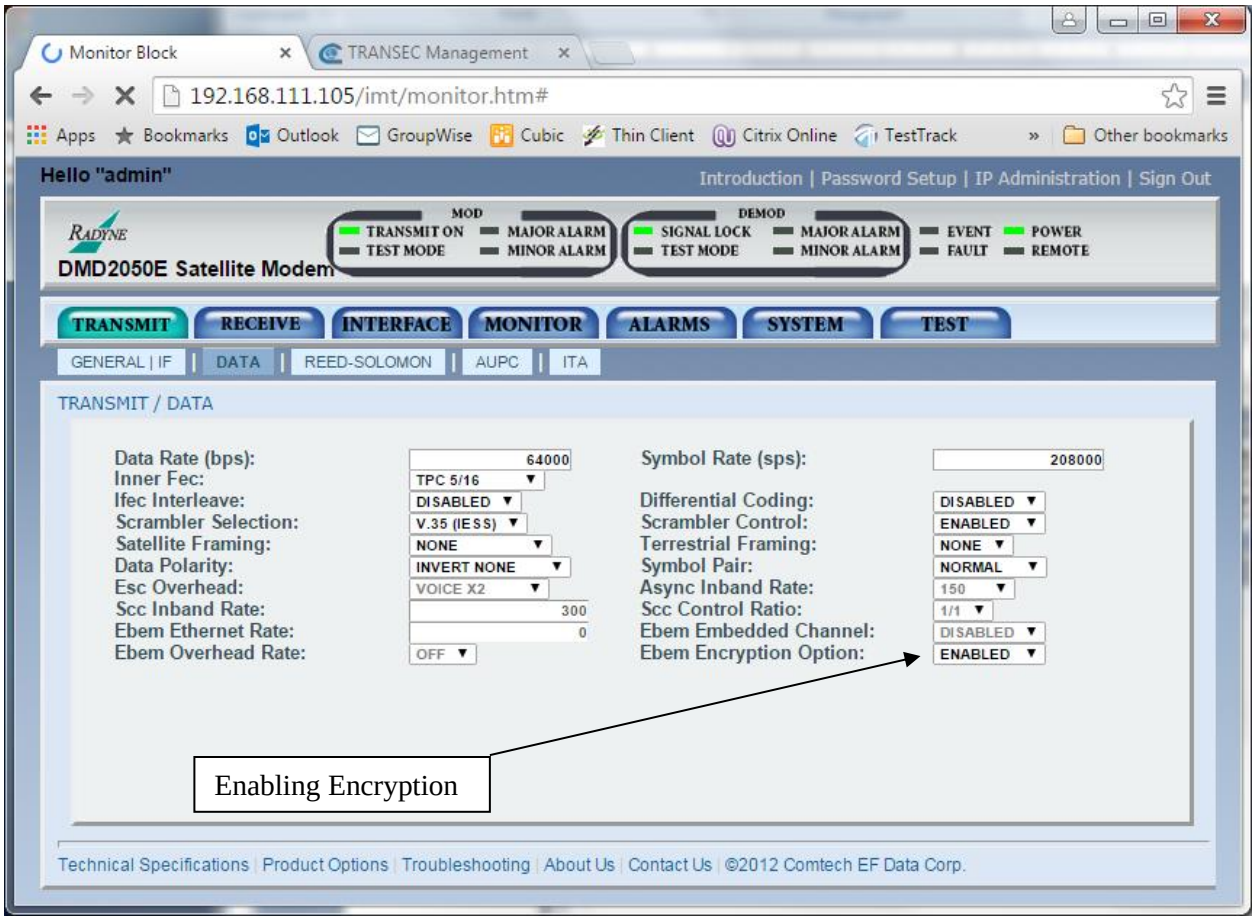

Figure 4 -TX Data Menu

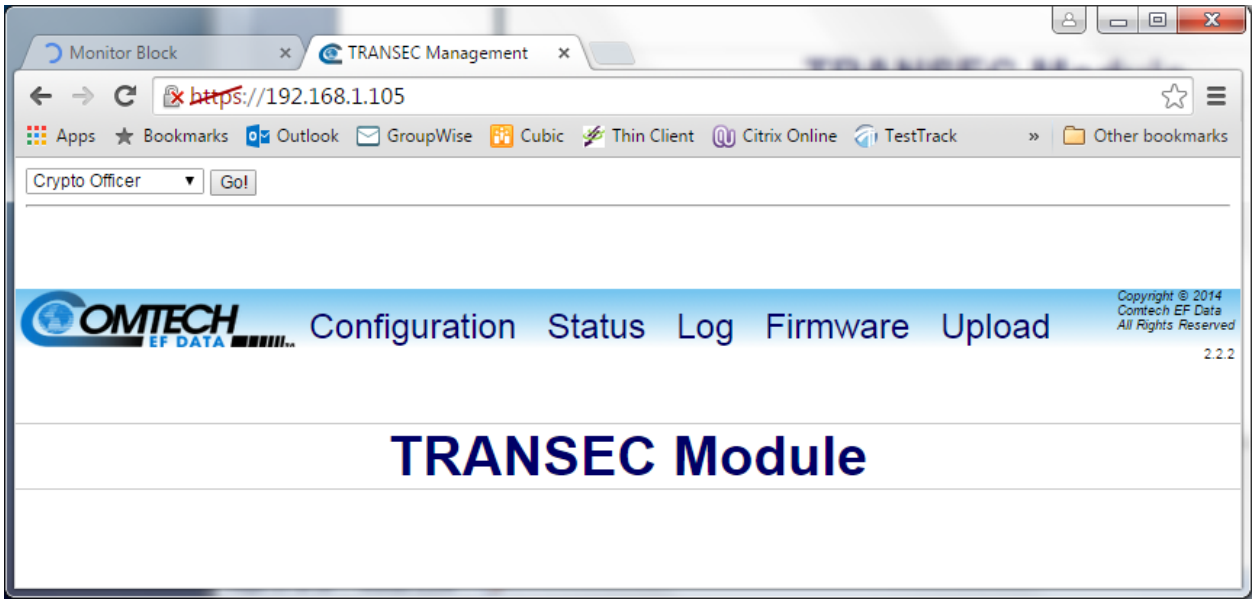

Figure 5 – Comtech EF Data TRANSEC Module

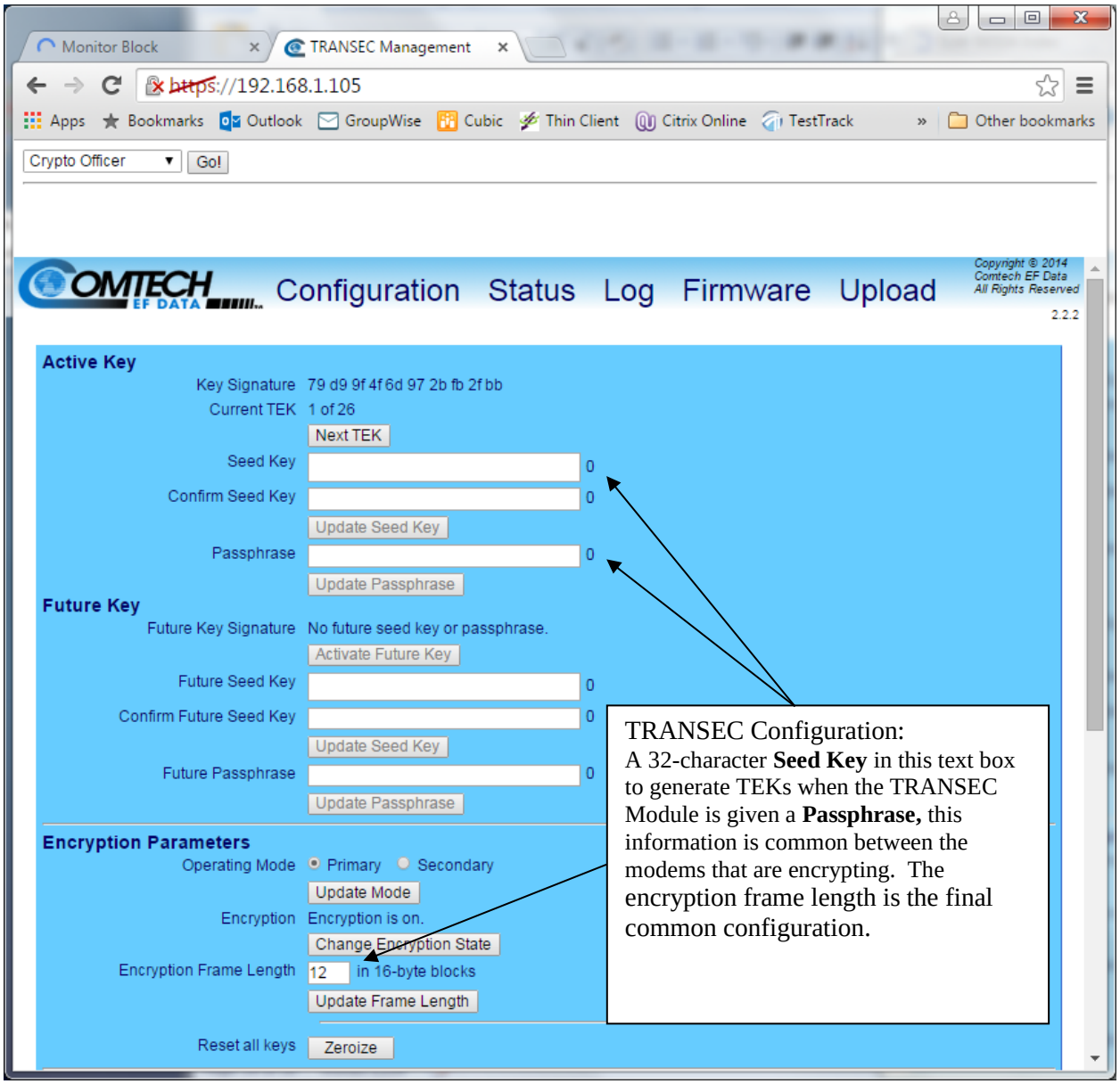

Figure 6 – Comtech EF Data TRANSEC Module Configuration

3.3 Closed Network Antenna Handover (AHO)

The DMD2050 family now offers an antenna handover solution for dual antenna configurations that utilizes an Antenna Control Unit (ACU) to properly detect blockage zones and automatically switch the system to the unobstructed link up to the satellite. The existing dual antenna solutions only mute the TX output while the modem potentially stays on line creating a broken link. In order to eliminate this confusion in the system the DMD unit utilizes the RCS11 redundant switch to receive feedback from the DAC 2202 ACU in order to switch the communication chain to the unobstructed link. In this configuration DMD provides the modem lock and gain information to the ACU, which is configured for external AGC and modem lock, the ACU then has all the information required to operate and properly relay the correct information on link status to the RCS11 to keep the correct system link on line.

3.3.1 Configuration

Figure 7 shows the basic block diagram of the DMD2050 antenna handover setup.

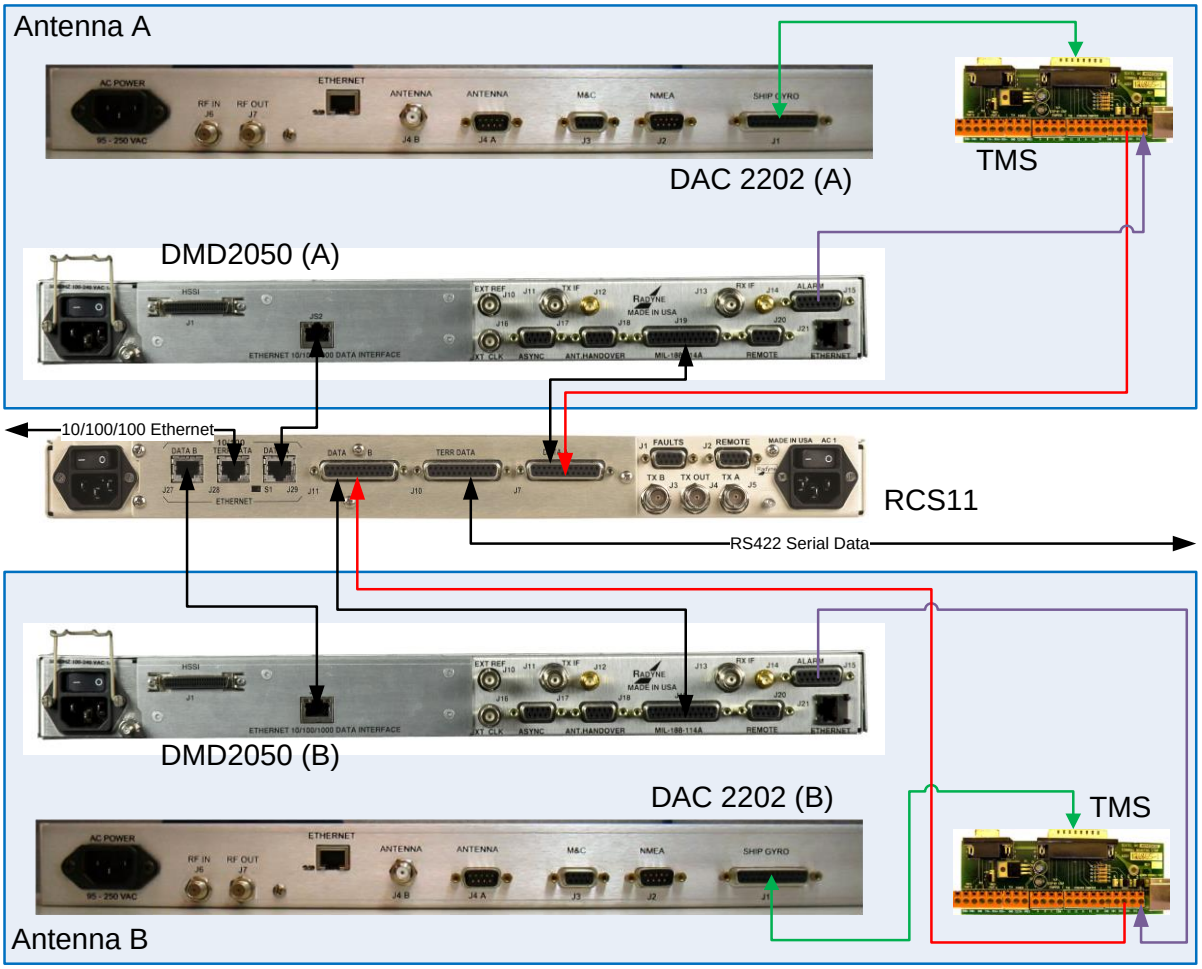

Figure 7 - Basic Block Diagram of the DMD2050 Antenna Handover Solution

3.3.2 DMD2050 MIL-188-114A (J19)

Label	Description	Connector Type
MIL-188-114A J19	EIA-530 Port (RS-422)	25-pin Female D

Table 4 - Pinouts for J19 MIL-188-114A Port 25-pin Female D Connector

Pin No.	Signal Name	Signal	Direction
1	Shield	---	---
2	Send Data A (-)	SD-A	Input
3	Receive Data A (-)	RD-A	Output
4	Request To Send A (-)	RS-A	Input
5	Clear To Send A (-)	CS-A	Output
6	Data Mode A (-)	DM-A	Output
7	Signal Ground	SGND	---
8	Receiver Ready A (-)	RR-A	Output
9	Receive Timing B (+)	RT-B	Output
10	Receiver Ready B (+)	RR-B	Output
11	Terminal Timing B (+)	TT-B	Input
12	Send Timing B (+)	ST-B	Output
13	Clear T Send B (+)	CS-B	Output
14	Send Data B (+)	SD-B	Input
15	Send Timing A (-)	ST-A	Output
16	Receive Data B (+)	RD-B	Output
17	Receive Timing A (-)	RT-A	Output
18	Modulator Fault - Open Collector	MF	Output
19	Request To Send B (+)	RS-B	Input
20	Data Terminal Ready A (-)	TR-A	Input
21	Demodulator Fault	DF	Output
22	Data Mode B (+)	DM-B	Output
23	Data Terminal Ready B (+)	TR-B	Input
24	Terminal Timing A (-)	TT-A	Input
25	No Connect	---	---

3.3.3 DMD2050 ALARM (J15)

Label	Description	Connector Type
ALARM J15	Alarm Port	15-pin Female D

The Alarm port uses contact closures to identify the status of the unit.
Normally Open or Normally Closed conditions indicate a FAULTED or OFF state.

- C = Closed
- NO = Normally Open
- NC = Normally Closed

Table 5 - Pinouts for J15 ALARM Port 15-pin Female D Connector

Pin No.	Signal Name	Signal	Direction
1	Mod Fault - C	MF-C	No Direction
2	Mod Fault – NC	MF-NC	No Direction
3	Mod Fault – NO	MF-NO	No Direction
4	Demod Fault - C	DF-C	No Direction
5	Demod Fault – NC	DF-NC	No Direction
6	Demod Fault – NO	DF-NO	No Direction
7	Prompt - C	CEF-C	No Direction
8	Prompt – NC	CEF-NC	No Direction
9	Prompt – NO	CEF-NO	No Direction
10	Service – C	SP1-NO	No Direction
11	Service – NC	SP1-NC	No Direction
12	Service – NO	SP2-NO	No Direction
13	No Connect	SP2-NC	No Direction
14	AGC Out	AGC	No Direction
15	Ground	GND	---

3.3.4 DMD2050E Modem Setup

Set the DMD2050 modem for antenna handover by changing the *BB Relays* to **AHO 1:1 Switch** in the general interface menu as shown Figure 8.

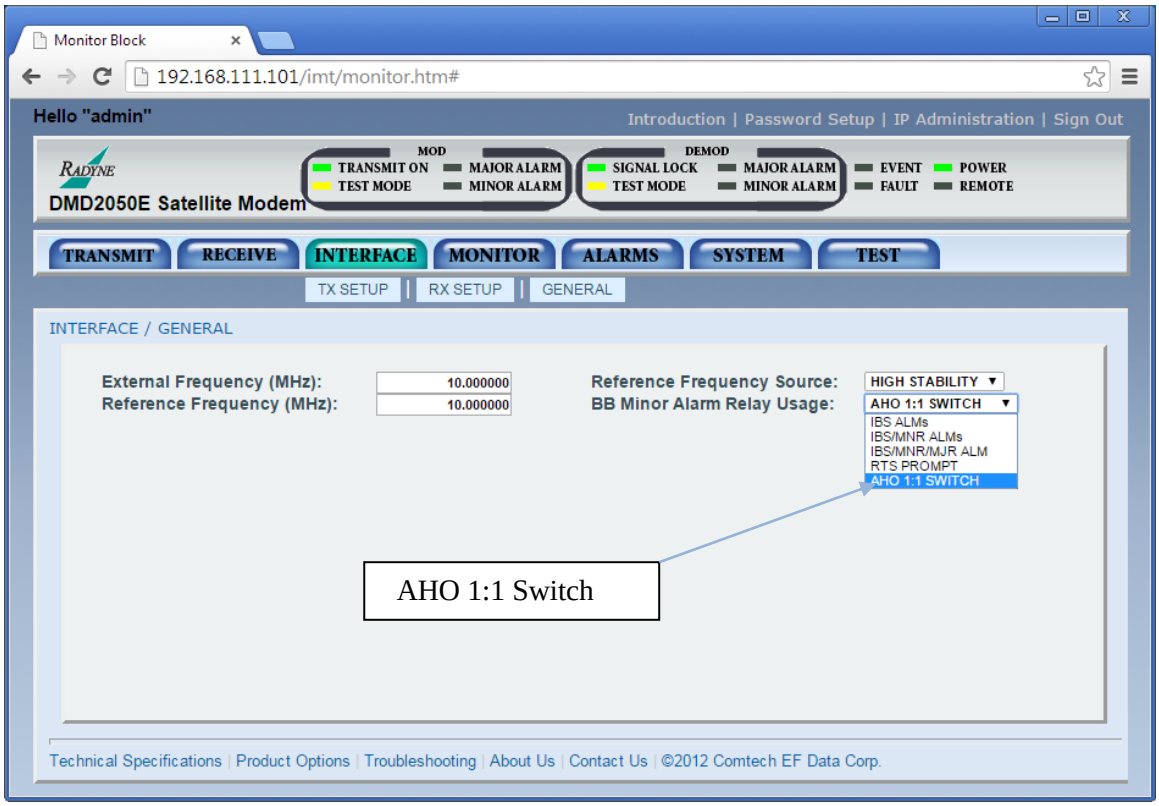

Figure 8 - DMD2050 Antenna Handover Setup

3.4 Transmit Direct Sequence Spread Spectrum (DSSS)

The DMD2050 transmitter now supports Direct Sequence Spread Spectrum (DSSS) for spreading the transmit signal between 1x and 16x the symbol rate up to 10 chips per second. This functionality is available in closed net mode using BPSK in any LDPC (HP or ULL) available on the unit. This function is designed to be interoperable with the current implementation of the SLM-5650A and includes the following:

- Direct Sequence Spread Spectrum "spreading" in the transmit path only
- Only applicable to BPSK modulation
- Spreading factors of 2, 4, 8, and 16 at a minimum
- Direct Sequence Spread Spectrum interoperable with the SLM-5650A

DSSS works by modulating the normal carrier with a pseudo-random PN sequence (chips) at a much higher chip rate. The chip rate is determined by the carrier's symbol rate and a multiplying (spreading) factor.

The Spreading Factors currently supported are 1(Spreading Off), 2, 4, 8, and 16up to a maximum chip rate of 10 Mcps. The user can select between four built-in pseudo-random PN sequences so that multiple spread carriers can occupy the same bandwidth in a Code-Division Multiple Access (CDMA) fashion.

When using large spreading factors, the DMD2050 also exhibits a large tolerance to jamming – up to 24 dB – and a Low Probability of Detection/Interception. With DSSS enabled, the lower data rate limit has been reduced to 8 kbps. The DMD2050 Base

Modem Web Server Interface provides a Web page to facilitate anti-jamming applications. This page allows the user to configure the modem parameters so that a fixed occupied bandwidth can be maintained.

There is no loss in performance with spreading enabled. To configure the spreader on the DMD2050 refer to Figure 9 and Figure 10.

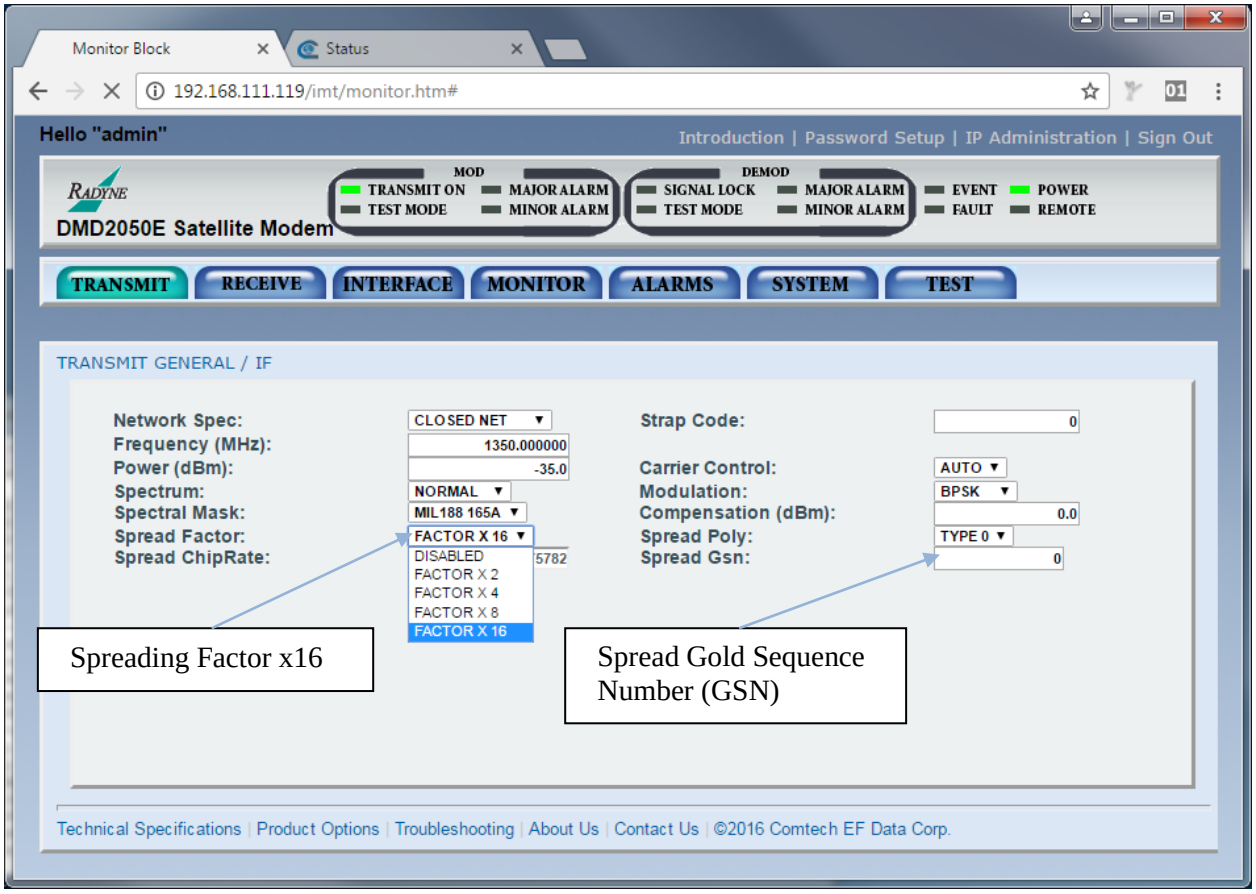

Figure 9 - DMD2050 Spreader Configuration

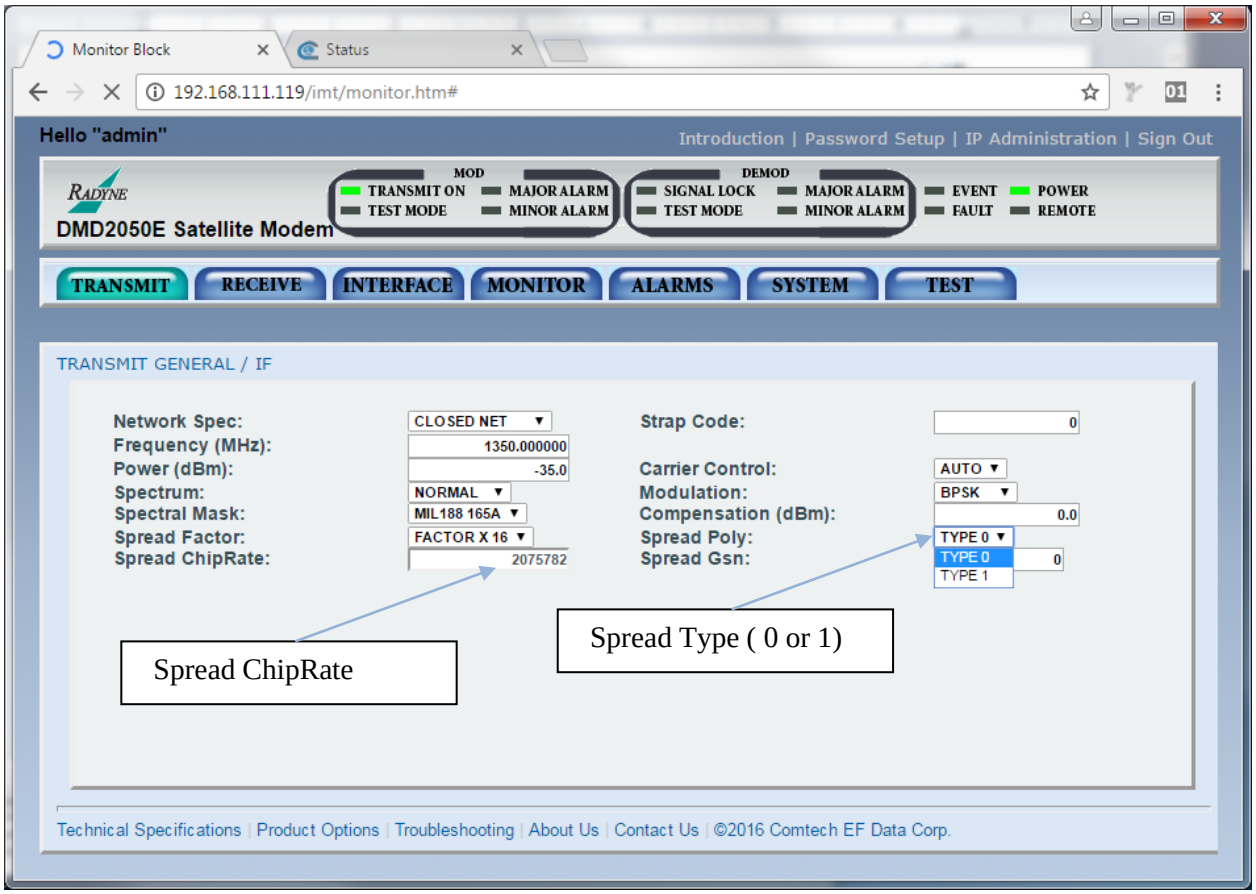

Figure 10 - DMD2050 Spreader Configuration

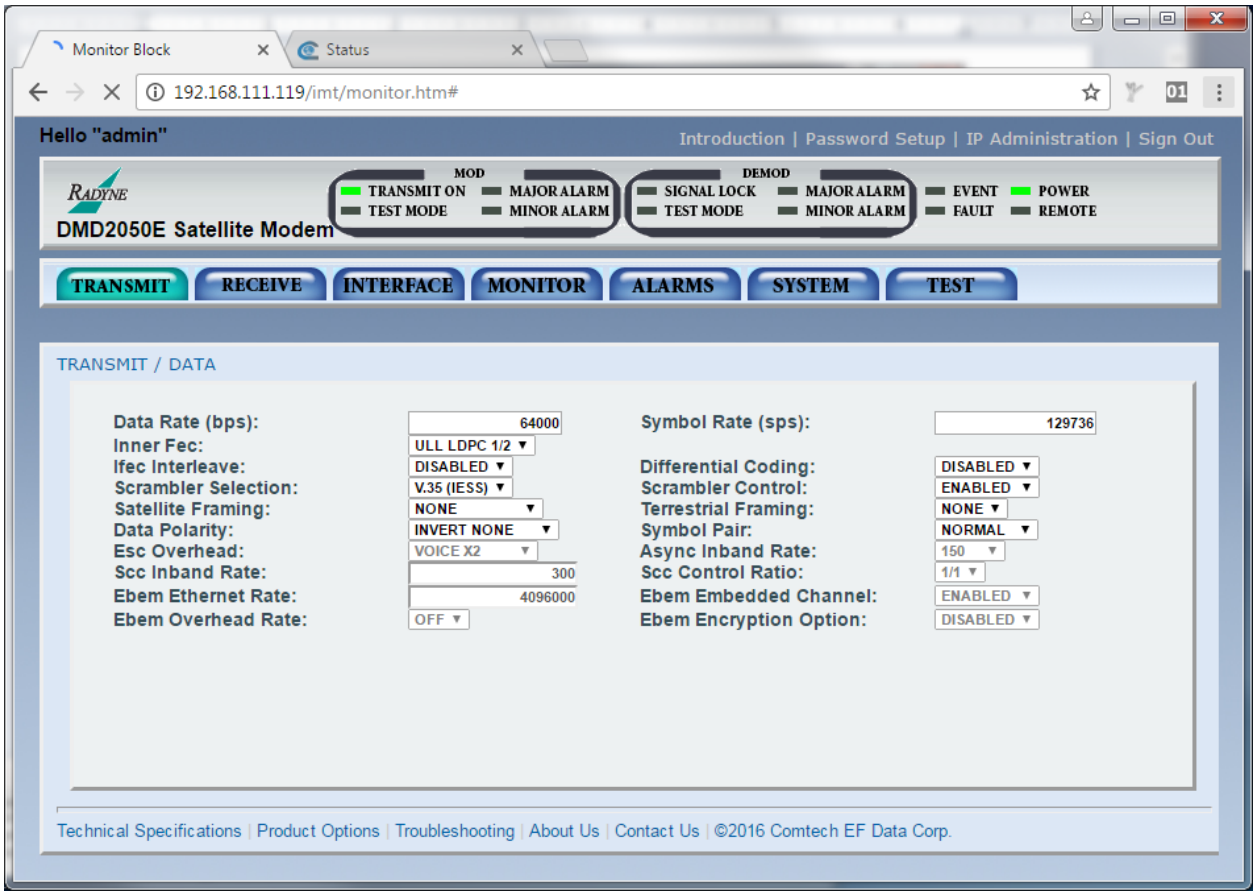

3.5 Transmit Ultra Low Latency (ULL) Low Density Parity Check (LDPC)

The **U**ltra **L**ow **L**atency (**ULL**) code provides the lowest latency, but worst performance of the three block sizes. This code is available in the data rate range from 32 kbps to 2 Mbps and is compatible with the all Comtech EF Data ULL implementations. The DMD2050 configuration for ULL LDPC is shown in Figure 11.

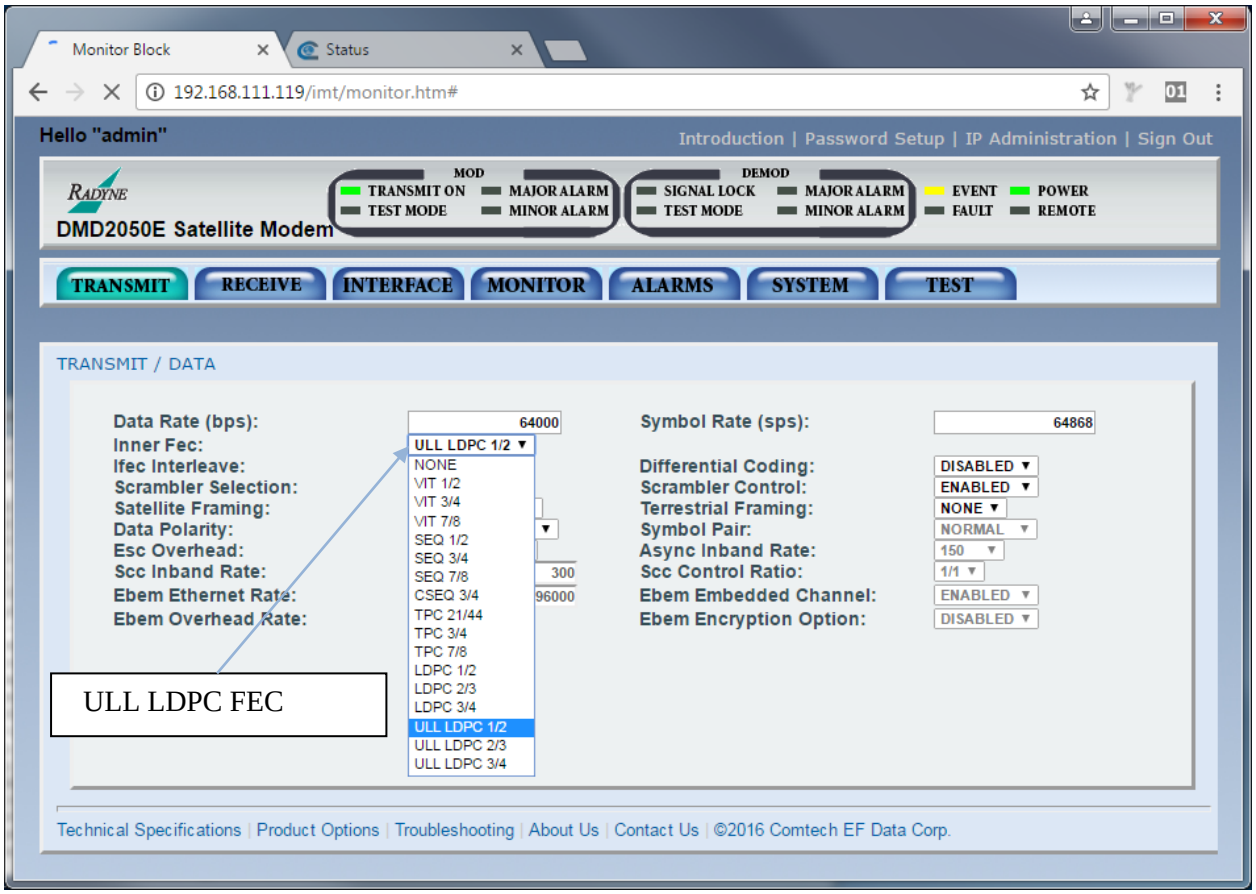

Figure 11 - DMD2050 Ultra Low Latency (ULL) LDPC

3.6 Receive Signal Level Monitor Extension

The DMD2050 Receive signal level monitor input limit was changed from -55 dBm minimum to -75 dBm minimum, however the calibration specification of +/- 5 dBm is only valid to -55 dBm any reading below -55 dBm is purely a diagnostic for the operator.

3.7 Unit specific Carrier-In-Carrier™ Gain Adjustment and override or calibration

The DMD2050 now has the ability to tune the RX Gain of the Carrier-In-Carrier™ card on the modem. This override is adjustable +/- 20 dB in 1 dB steps from the front panel of the unit under the <SYSTEM> <HW/FW CONFIG> <CNC BOARD> <RX GAIN ADJUST>. Or from the dumb terminal in the CnC Card menu shown in Figure 12. If the user enters a value in the unit, it will override the default setting of the card and be retained in the unit. To default back to the system setting a zero is entered.

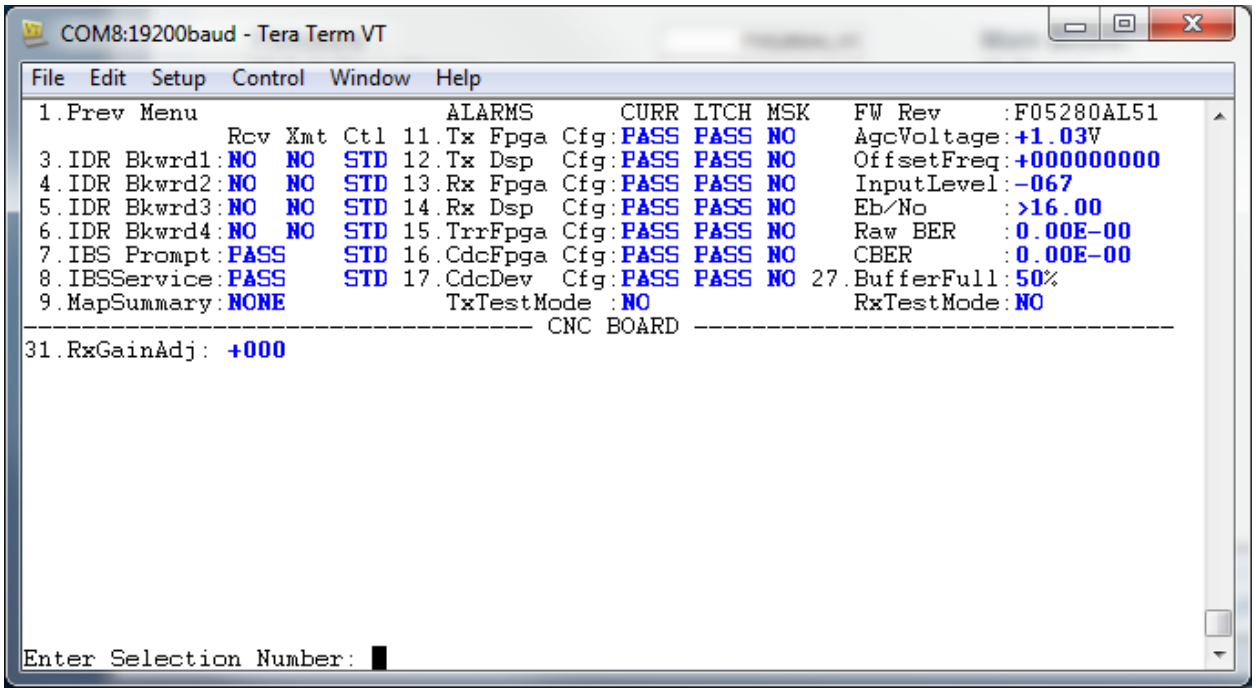

Figure 12 - DMD2050 CnC RX Gain Manual Override and Calibration using Dumb Terminal

4 Bug Fixes

4.1 Web Browser

Corrected condition where web server would stop responding after repeated refresh commands from browser.

4.2 Real Time Clock

Test Tracker 541 – "Power Cycling will lose the current set Date and Time" The DMD2050 will now retain the user set time and date of the modem after a system reboot.

4.3 Terminal Scrolling

The dumb terminal characters "<" and ">" now properly allow scrolling between fields without having to "enter" the character. This provides the user to intuitively move up / down the event log as well as moving to dual entry prompts such as the Configuration screen.

4.4 V.35Scrambler data polarity

Test Tracker 509 – "EBEM Codec TPC BPSK/QPSK Scrambling V35 Shows Data Invert in FireBerd RS422. TPC Scrambling is OK". The V.35 Scrambler polarity in MIL-STD-188-114A and HSSI both with and without block mode encryption is now normalized, this allow the user to use this scrambler without having to invert the data. This is specifically relevant when operating the unit in CnC mode were this is the only scrambling choice available. This is also relevant when operating the unit in Ethernet

mode this is important because there is no good indication of improperly polarization of the data.

4.5 Efficient Drop and Insert

Test Tracker 507 – "When running Efficient D&I mode, 8PSK, TPC 3/4 at 320Kb, fireberd takes sync hits. Runs OK with TPC 7/8. Runs OK with TPC 3/4 if rate is changed to 256Kb or 384Kb." A jitter attenuator was implemented to allow the unit to lock in efficient DAI regardless of the loop ratios.

4.6 RX Input Level Threshold Alarm Functionality

The RX Input Level Threshold previously simply triggered a major alarm on the unit, the unit will now drop signal lock when the RSL drops below the user defined threshold.

5 MnC Alterations

5.1 FIPS Block Mode

- Added generic support for FIPs block mode control and for overhead ratios in Codec devices when FIPs module detected
- Added Tx/Rx Block Mode Encryption controls (TX Disable / Enable and RX Disable / Enable
    - Front panel support
    - Dumb terminal support
    - SNMP Control
    - Web

5.2 Ultra Low Latency LDPC

- Added generic support for UUL LDPC Codes in LDPC Codec devices when implemented (PL-20173) EBEM PL-20958 (EBEM card less Stratix device)
    - CodeRate ½
    - Code Rate 2/3
    - Code Rate 3/4
- Allow interleaver controls
- Added ULL Ebno lookup tables
- Added Tx/Rx Interface controls
    - Front panel support for all rate selections
    - Dumb terminal support for all rate selections
    - SNMP Enumeration
    - Web Enumeration

5.3 Generic support for transmit DSSS spread spectrum

- ModFPGA Driver updated to provide generic control
- Updated LDPC FPGA driver for ULL FPGA programming PL-0020173 Ebem card (DMD2050E)
- Updated LDPC FPGA driver for ULL FPGA programming PL-0020958 (DMD50/DMD20/OM20)

- Added fast code feature bit to feature manager to allow spread spectrum on capable hardware
- Added Tx/Rx Interface controls
    - 2^1 (none or bypass)
    - factors 2^2, 2^3, 2^4
    - Polynomials Type 0 and Type 1
    - GSN
    - Calculations for chiprate
- Front panel support for all enumerated factors
- Dumb terminal menu (new view) with support for all enumerated factors, Type, polynomials and chiprate
- SNMP enumerated factors, Type, GSN, and chip rate and feature bit
- Web enumerated factors, Type, GSN, and chip rate
- RLLP messaging for factors, Type, GSN, and chip rate

5.4 General Changes

- Removed EBEM Ethernet data rate restriction to allow max symbol rate (30 MSPS DMD2050/E/UE) and (10 MSPS DMD1050TS)
- Added commands to set time and date through terminal
- Added generic codec device support for Ultra Low Latency UUL 1/2, 2/3 and 3/4
- Added Spreader Adt's
- Added spreader Polynomials { 0x0E, 0x0C }
- Added Spreader Taps { 0x6000, 0x100D }
- Added Spreader Taps { 0x6210, 0x1358 }
- Added spreader GSN value lookup table for 2056 codes
- CnC-Loopback
- Added Product Support for DMD1050T / DMD1050TS
- Added driver for ADRF6755 100-2400 MHz I/Q Modulator with integrated fractional-N PLL and VCO used on PL-0021834 DMD1050 and DMD1050TS RF Card
- Added driver for HMC900LP5E 50 MHz Dual Programmable Low Pass Filter used on PL-0021834 DMD1050 and DMD1050TS RF Card
- Added driver for common TF3765 synthesizer tuning specifically for ADRF6755 used on PL-0021834 DMD1050 and DMD1050TS RF Card
- -Added product support for DMD1050T and DMD1050TS to feature manager
- -Added hardware capabilities for new supported boards to feature manager
    - Baseband PL-0021833
    - RF PL-0021834
    - Phantom Codec PL-0021833Codec
    - Baseband PL-0022534
    - Phantom Codec PL-22534Codec
- Added Product DMD1050T
- Added boards PL-0021833 DMD1050T Baseband
- Added phantom integrated PL-21833Codec card with FIPs FPGA
- Added PL-0020604 Codec expansion card for DMD platform with FIPs FPGA (Test Card TPC/LDPC Block mode cryptography)

- Integrated As-5497 to include the integrated 10/100 Ethernet with MnC SNI PHY interface (DMD1050T/DMD1050TS)
- Added Product DMD1050TS
- Added boards PL-0022534 DMD1050TS Baseband
- Added phantom integrated PL-22534Codec card with Flex FPGA
- Added RCS11 1:1 AHO BB Relays
- Added the ability to manually adjust or calibrate and retain the Rx Gain of an installed CnC card installed on system
- Added ability to set the IP address of FIPs cards, when present running in block mode (separate and different format than counter mode)
- Added FIPs IP Address
- Added FIPs IP Mask
- Added FIPs Default Gateway
- Added new FIPs Mailbox device driver, moved counter mode messaging from EBEM subsystem to mailbox driver, added block mode messaging to driver.
- Added device programming for FIPs FPGA Altera Codec Cyclone III EP3C120F484C7 PL-0021833 (DMD1050T)
- Added device programming for FLEX FPGA Altera Codec Stratix III EP3SL150F780C2 PL-0023534 with EBEM codec (DMD1050TS)
- Added device programming for block mode FIPs functions on e_TXFPGA for LDPC and TPC PL-002173 (DMD2050E)
- Added device programming for block mode FIPs functions on e_RXFPGA for LDPC and TPC PL-002173 (DMD2050E)
- Added strap code "246" EBEM default for Customer Support
- Added special pushback for moving in and out of EBEM with a strap code
- Added diagnostic event log output for legacy EF AUPC command errors because of changes to EF AUPC command set on Comtech products
- Added a soft reset command to Ethernet switch to allow flushing the traffic tables
- Added image registers for new phantom codec cards
- Added net stack reset command to terminal screen
- Changed Web display of AGC voltage to Scaled double
- Updated bound on pending value Generic Bound Adt in class Manual Control Adt
- Updated CnC configurations to allow cancelling of ULL LDPC codes
- Updated CnC to use board specific Rx gain
- Updated Parent Codec devices to allow block Tx and Rx encryption on inherited codec boards with FIPs module detected for enabling as well as queuing encryption frame size of block mode encryption
- Updated error return on front panel 911 zeroizing off FIPs module (EBEM Mode)
- Moved FIPs from EBEM subsystem to Codec Subsystem
- Moved ITA from PL-0020173 board to parent codec board so that Phantom Codec PL-22534Codec could inherit it and use ITA on the DMD1050TS
- Fixed retention of date and time from RTC
- Fixed terminal "shift in control code" scrolling "<" and ">" to work and not require return

- Fixed driver for NUL terminated string compare functions when using Terrasat BUC FSK
- Fixed Front panel / dumb terminal reporting of RX signal level voltage reporting
- Fixed ASR6002 Interposer V.35Scrambler control to be done on baseband card
- Fixed Eb/No table rollover condition causing railing of lookup table
- Fixed Force the differential encoding to the off state when running EBEM modes
- Fixed Allowing V.35 EF Scrambling in CnC modes
- Fixed calculation for Efficient DAI n and r values
- Fixed Eb/No display for data rates 52M to 114M Ebem modes
- Fixed reset condition for EBEM RX state machine during acquisition
- Modified RSL display low end from -55dBm to -75dBm
- Fixed a mistake in calculation of RX carrier level Alarm that would prevent lock below threshold not just alarm system
- Added a 50-count integration to the AGC display to prevent flooding transaction engine when displaying AGC on the interface
- Added setting the correct DSP sweep modes when in EBEM NetSpec
- Added hard unlock of carrier for board-based modems when signal is below threshold, specifically for TMW

5.5 Updates to General Modem

5.5.1 New ADT's

- CncRxGainAdjustAdt
- RxFipsOverheadRatioAdt
- TxSpreadFactorAdt
- TxSpreadPolyAdt
- TxSpreadGsnAdt
- TxSpreadChipRateAdt
- TxFipsOverheadRatioAdt

5.6 Non Volatile Memory Changes

- Add locations for storing spreader controls
- Add locations for storing CnC gain manual override or calibration

5.7 MIB Updates

- Added OID’s
  - radDmd20TxSpreadFactor
  - radDmd20TxSpreadPoly
  - radDmd20TxSpreadGsn
  - radDmd20TxSpreadChipRate

6 Known Issue(s) In This Release

N/A